8CH / 16CH DIGITAL VIDEO RECORDER 960 H

DIGIMASTER SERIES

DR-8FX5 / DR-16FX5

INSTALLATION MANUAL

**Before connecting, operating adjusting this product,
read this instruction boolet carefully completely**

GANZ®

CONTENT

OVERVIEW

3 Before Installation
4 Key Features
6 Front Panel
7 Rear Panel
8 Remote Control At a Glance

INSTALLATION

10 HDD Installation
12 Basic Layout
13 Connecting to an external devices

Before installation

Comply with the following instructions to prevent a fire, explosion, system failure or electric shock.

- ✧ Remove the power supply module before proceeding.
- ✧ Check the input voltage (AC100V–AC240V) to the power supply module before connecting it.
- ✧ Keep the product away from humidity.
- ✧ Ensure that all devices connected to the product should be properly earth-grounded.

In operation mode

Comply with the following instructions to prevent a fire, explosion, system failure or electric shock.

- ✧ If you need to open the cover, consult with a service person who could help you do what you want to do.
- ✧ Do not connect multiple devices to a single power socket.
- ✧ Keep the product away from dust or too much combustible substances (ex: propane gas).
- ✧ Do not touch it with wet hand.
- ✧ Do not insert a conductor in the vent of the ventilation system.
- ✧ Do not apply excessive force to unplug the power cord.

Disassembly & Cleaning

- ✧ When cleaning on the surface, use a dry cloth.
- ✧ Do not wipe the product using water, paint thinner or organic solvents.
- ✧ Do never dismantle, repair or modify the product by your own.

During installation

To prevent an accident or physical injury and to operate DVR properly, please comply with the followings

- ✧ Secure at least 18 centimeter of distance between cooling fan and wall for a proper ventilation.
- ✧ Install the product on a flat surface.
- ✧ Keep it away from direct sunlight or excessive temperature.

While in use

- ✧ Do not apply force to or shake it while using it.
- ✧ Do not move, throw away or put excessive force to it.
- ✧ Using any unrecommended HDD may cause a system failure. Check the compatibility list and use only compatible HDDs.
- ✧ {A system failure or data loss caused by an incompatible HDD will void your warranty.}

Key Features

This product is capable of receiving inputs from up to 16 channels of 960H camera inputs of video and audio recording onto a hard disk drive in real-time, as well as providing monitoring, playback and backup footage in excellent quality of 960H resolution.
It also provides transferring video and audio data to the networked external devices, which allows remote monitoring environment for computers and mobile devices including cell phones.

- ✧ 16 channels of 960H camera videos can be displayed at 480(NTSC)/400(PAL) fps in real-time.
- ✧ Up to 16 channels of 960H camera videos can be saved at maximum 480 /400 fps.
- ✧ Simultaneously recording and playback of maximum 16 channels.
- ✧ Supports H.264 HP CODEC.
- ✧ Auto alarm feature with self-diagnostics on the system (HDD S.M.A.R.T, network error, etc.)
- ✧ Supports dual streaming for remote access service.
- ✧ Various search methods (time, event, bookmark and thumbnail).
- ✧ Mass storage backup via USB port.
- ✧ Supports remote access and search using web server.
- ✧ Dedicated smart phone applications that can be used with iPhone and iPad or on Android OS.
- ✧ 1080p Full HD GUI

What's included?

Mouse

Remote Control
& Batteries (AAA x2)

Power Cable

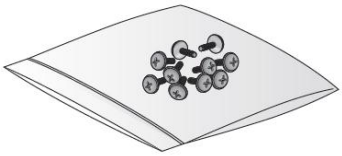

Screws

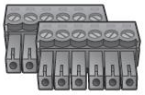

Terminal Blocks

User manual CD

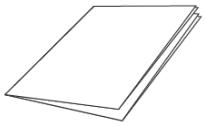

Quick Guide

Front Panel

Name		Description
IR Remote Control Receiver		Receive the signal from the remote control
USB		Used for connecting USB storage or mouse.
Status LED	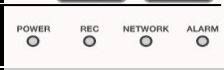	Show the status of power, recording or network connection together with the corresponding alarm.
HDD 1~5 / eSATA	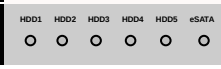	Indicates connection status of internal/external storage devices.

Rear Panel

8 channel

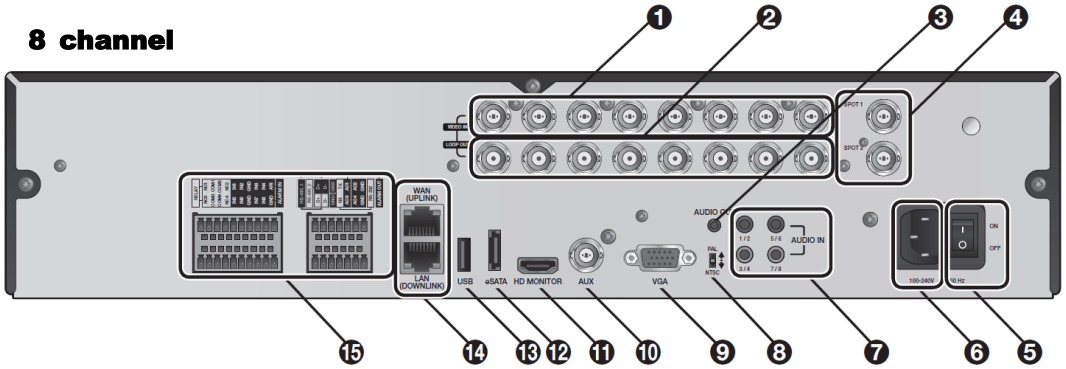

16 channel

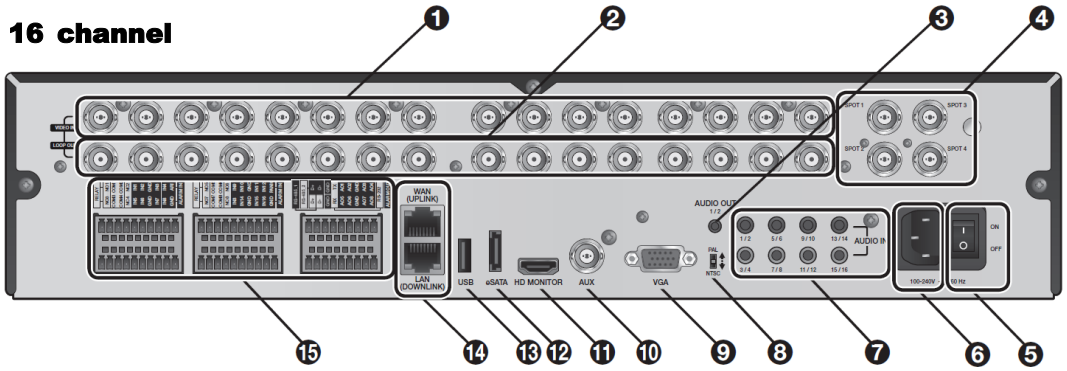

NO	Name	Description
1	VIDEO IN	Video input terminal for cameras.
2	LOOP OUT	Video output port to send signal to an external video device
3	AUDIO OUT	Port for speaker connection.
4	SPOT	Exclusive port for SPOT output only (Connect to a TV monitor)
5	Power Switch	DVR power switch. Plug the power cord and turn the switch on.
6	100-240V(50/60Hz)	Power input port. Connect to a DV12V adaptor.
7	AUDIO IN	Port for audio input.
8	DIP Switch	Switch to select a video type or an output type.
9	VGA	VGA monitor video output port.
10	AUX	Additional SPOT output. (Connect to a TV monitor)
11	HD MONITOR	HD monitor video output port.
12	eSATA	Connection port for external eSATA storage.
13	USB	Used for connection USB Storage or mouse.
14	WAN(UPLINK) LAN(DOWN LINK)	Network port for connection to the Internet, router or hub Reserved (DO NOT connect)
15	ALARM IN ALARM OUT RELAY RS-485 RS-232C	Alarm input signal port. Alarm output signal port (TTL Level) Relay Terminal output port. Port for communication with external devices such as PTZ camera and system keyboard. Port for communication with external devices such as PTZ camera, POS and ATM devices.

Remote Control At a Glance

POWER
Turn on or off the power.

SEARCH
Display the search window.

ARCHIVE
Display the backup window.

Channel
Function as channel selection button in live or playback mode. Or used for entering the password.

DISPLAY
Switch the split mode.

SEQ
Switch to sequence mode.

SNAPSHOT
Turn on or off the power.

◀II, ◀, ▶II, II▶
Used to change the direction or adjust the play speed in playback mode.

EXIT
Exit from the current screen and return to the previous screen.

ENTER
Select a menu item or apply your settings.

LOGOUT
LOGOUT

PANIC
Start the emergency recording.

ALARM
Show the alarm status with a popup window.

SETUP
Display the system setup menu.

ID
Set the remote control ID.

LOG
Display the log list.

KEYLOCK
Lock any operation on the unit.

AUDIO
Display the audio channel selection window.

RESERVE
Turn on or off the power.

MENU
Display the tool bar on the live screen.

▲, ▼, ◀, ▶
Use to move through the menus

PTZ/ZOOM
Enter the PTZ or digital zoom Mode and control the operation.

Change the remote control ID

The remote control will be active only if the remote control ID matches with that specified on the DVR.

If multiple DVRs are installed on one place and you have just a single remote control, use the ID button to set the remote control ID. Only the ID-matching DVR can be controlled.

1. From **<SYSTEM> - <CONTROL DEVICE>** under the System Setup menu, set the **<REMOTE CONTROLLER ID>** and press **<Apply>.**

   Select between 00 and 99. For more details, refer to **<SYSTEM SETUP>.**
   The remote control will be active only if the remote control ID matches with that of the DVR's system ID.

2. Press the **[ID]** button on the remote control. The default remote control ID is 00.

3. Use the number buttons to provide a two-digit ID. If you want to enter 01, for instance, enter the number 0 and 1 in sequence.
   Check if the remote control ID is set properly by manipulating the remote control.

4. To reset the ID to 00, press and hold the **[ID]** button.

HDD Installation/Replacement

1. Remove 2 screws on both ends of DVR.

2. Pull the front side of the unit forward to separate it.

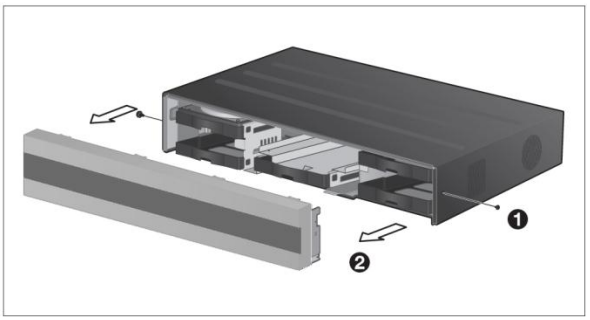

3. Hold the middle of the HDD brackets handle with index finger and pull it toward while sustaining the bracket handle with your thumb and middle finger as shown in the illustration.

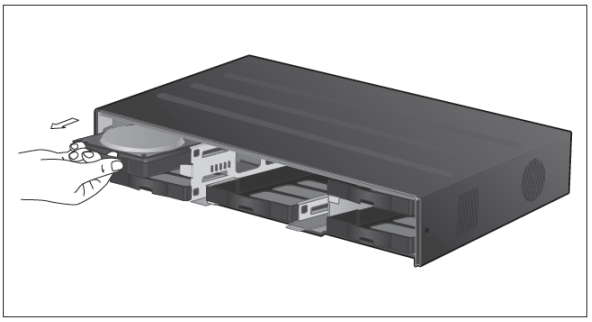

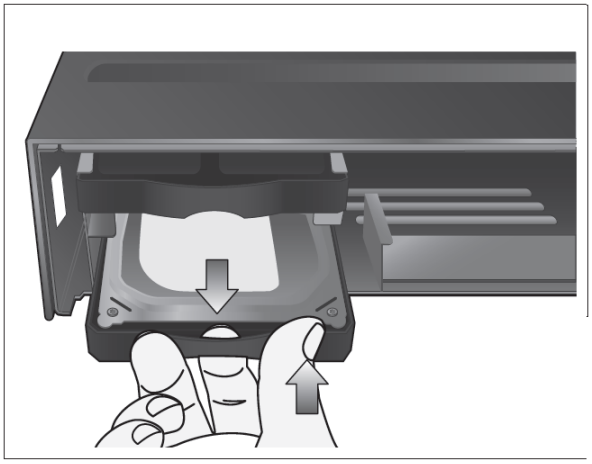

4. Once the HDD bracket is separated from the main unit, remove 4 screws on both ends of HDD bracket to separate the HDD.

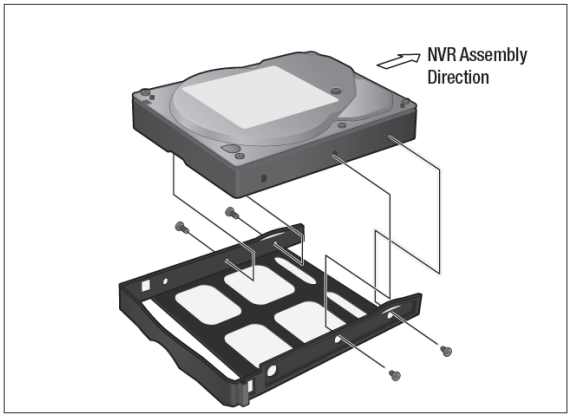

5. Install a new HDD and fasten 4 screws back to both ends of the bracket to fix.

   ✓ When installing HDD, make sure to Install in the correct direction.

6. Push the bracket installed with new HDD back into the main units it is completely inserted.

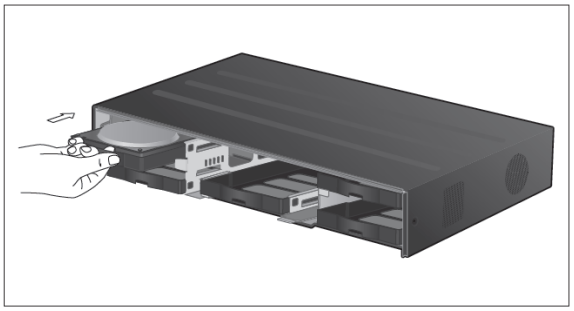

7. Assemble the front panel back to the unit.

   ✓ When assembling the front panel to the main unit, make sure the marked part is tightly attached.

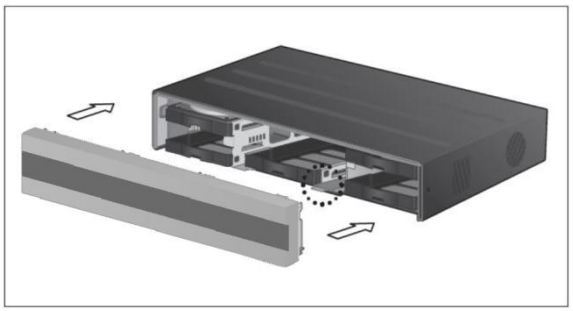

8. Fasten 2 screws on both ends of main unit.

Basic Layout

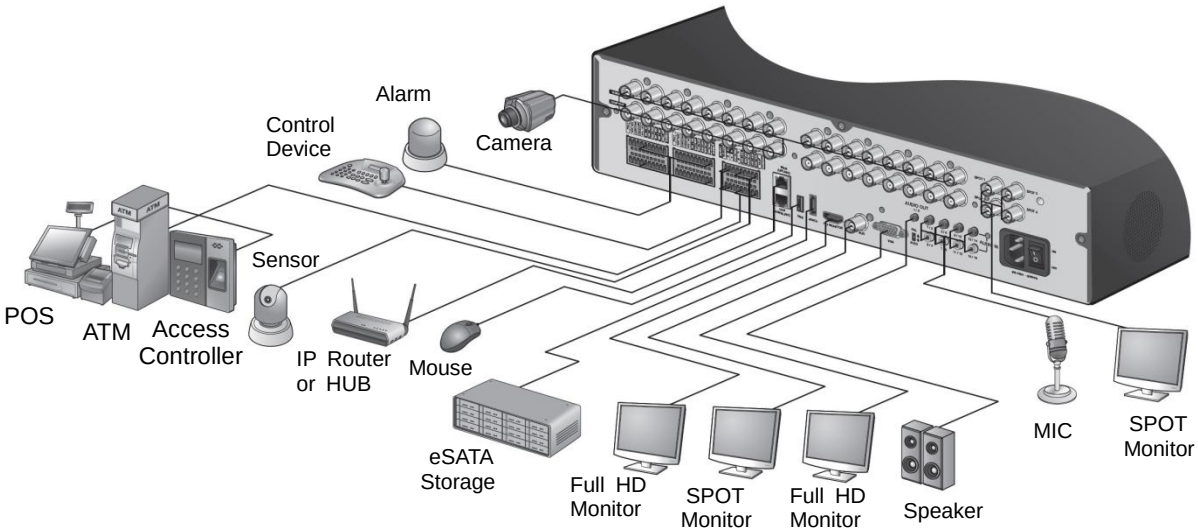

Since the cable quality may affect directly to the video quality depending on the distance between the camera and DVR, it's recommended to consult an authorized installer when installing the DVR.

Connecting to an external device

Connecting to the monitor

This product supports HDMI monitors and regular monitors that support VGA inputs.

- ✧ Once the product is set for NTSC or PAL output, connect cameras of the corresponding video standard for proper operations.
  Setting the product to NTSC or PAL decides available display output modes too.

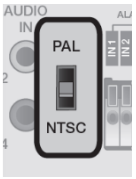

  - ✓ The monitor's displaying operates at 50Hz if the product has been set to PAL output and the connected monitor supports both 50Hz and 60 Hz inputs. For NTSC setting, it works at 60Hz.

  Make sure to connect the product to a monitor that supports 1920x1080, 1270x1024 or 1280x720.

Power Connection

Connect the power cable supplied with the product into the power socket on the main unit's rear side.

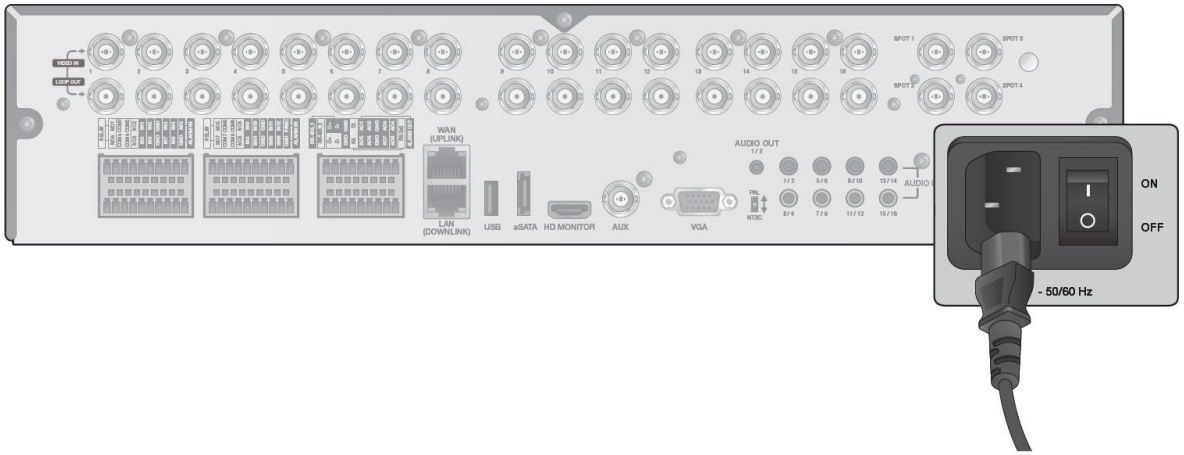

- ✧ Make connection when the power is not applied yet.
- ✧ Arrange up the cables and be careful not to peel off the cable coating.
- ✧ Do not place the power cord under the carpet or rug. The power cord is usually earth-grounded. However, even if it's not earth-grounded, do never modify it on your own for earth-grounding.
- ✧ Do not insert multiple devices in a single power socket. Otherwise, it may cause a power overload.

Alarm I/O Connection

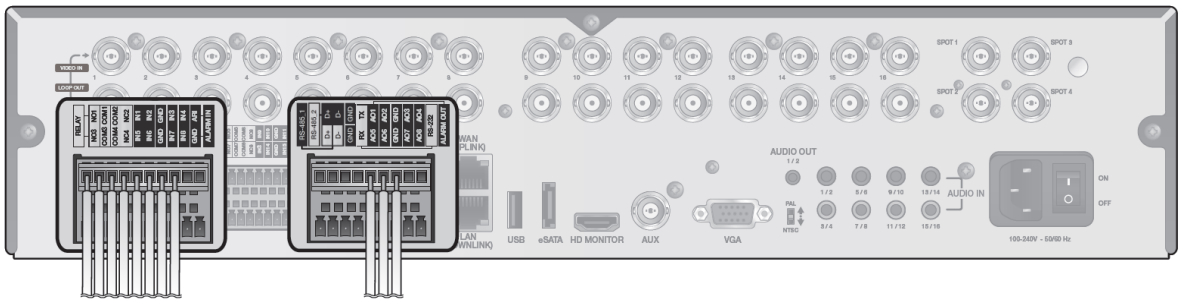

To connect the Alarm input signal

Connect the signal line of an alarm input device such as sensor to rear **[ALARM IN]** port

1. Loosen screws on **[IN1]** through **[IN16]** port and **[GND]** port of the provided terminal block.
2. Insert one end of alarm signal cable alarm input terminal hole below the screw hole, and then fasten the screw.
3. Insert ground signal wire into the hole of the **[GND]** port (shown also below the screw), and tighten the screw.
4. To check proper insertion of the cable, gently pull the cable and test whether it disconnects. To disconnet the cable, loosen the screw and pull out the cable.

To connect the Relay/Alarm output signal

Connect the signal line of an alarm output to rear **[RELAY]** port

1. Loosen the screws on the **[NO]** or **[NC]** port and **[COM]** port of the provided terminal bloack.
2. Insert the alarm signal wire into the hole of the **[NO]** or **[NC]** input prot (shown below the screw), and tighten the screw.
   Check the relay type befere selecting a proper
   - ✓ NO (Normal Open) : normally Open but switching to Close if an alarm out occurs.
   - ✓ COM : Insert the grounding wire.
   - ✓ NC (Normal Close) : Normally Close but switching to Open if an alarm out occurs.
3. Insert the ground signal wire into the hole of the **[COM]** port and tighten screw.

Or, you can connect the signal cable of the alarm output device to the **[ALARM OUT]**.

1. Loosen screws on **[AO1]** through **[AO8]** port and **[GND]** port of the terminal block.
2. Insert the alarm signal wire into the hole of the AO port and tighten the screw.
3. Insert the ground signal wire into the hole of the **[GND]** port and tighten the screw.
4. To check proper insertion of the cable, gently pull the cable and test whether it disconnects. To disconnet the cable, loosen the screw and pull out the cable.
5. Install the wire-connected terminal block in the rear port.

Communication Port

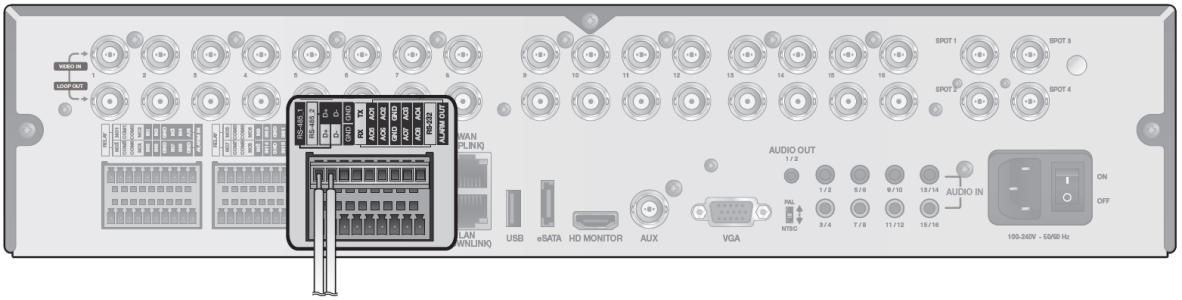

RS-485 Connection

Connect a PTZ Camera of Keyboard Controller.
After connecting the control device, be sure to match the connection settings between DVR and the device. Refer to communication settings in **"Operation Manaul"**.

Connect three signals (**[D+],[D-],[GND]**) between DVR and of the control device by using provided terminal block.

- ✓ For RS-485 connection, refer to the user's manual of the control devices.

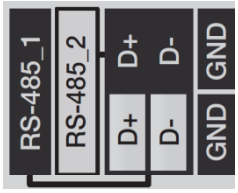

There is two ports of RS485 on rear panel.
RS-485_1 : Connect Keyboard controller
RS-485_2 : Connect PTZ cameras

RS-232C Connection

You can connect PTZ cameras, POS or ATM devices.
For connection of the text-in device, refer to the user manual of the text-in device.

- ✓ Signal connection for POS and ATM is scheduled to be upgraded later.

Audio Device Connection

You can connect an audio output device such as speaker amplifier.
Connect the audio input device such as microphone to the rear Audio In port, connect the audio output device such as speaker amplifier to the Audio Out port.

Storage and Mouse Connection

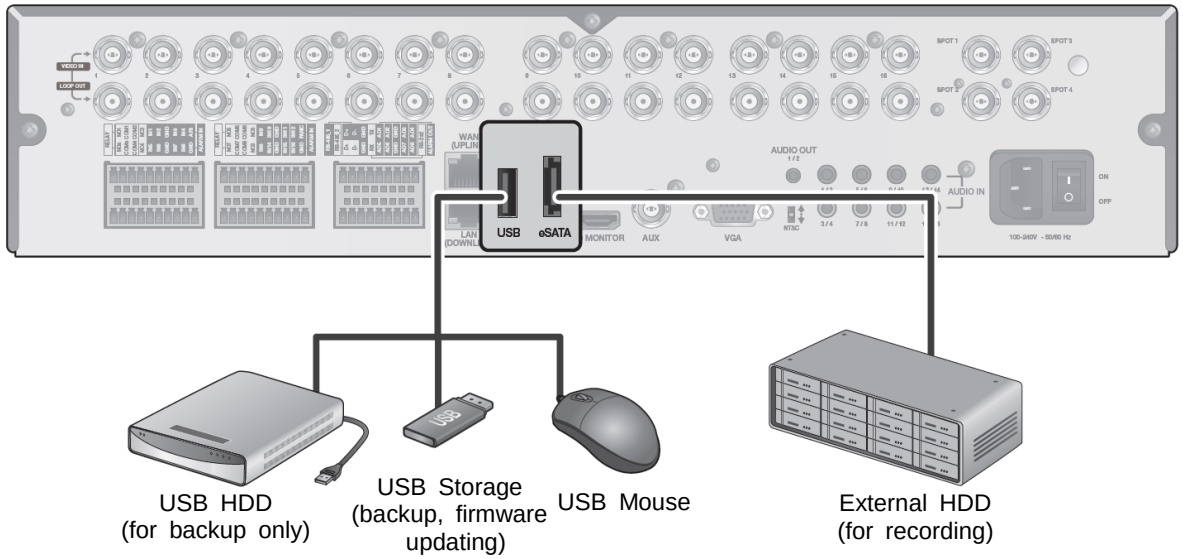

eSATA Storage

If the storage space is insufficient, you can extend your storage capacity by adding an eSATA storage device to the rear eSATA port.

USB Device

You connect and use USB storage devices for backup of recorded video, saving snapshot, firmware updating, importing/exporting user configurations. Also, USB mouse can be connected for DVR manipulations.

If you need to connect a USB HDD with a high power consumption, it is recommended to use a separate power source for that HDD.

Network Connection

PC connection in the local network

You can connect DVR to a PC in the same network and control or manipulate it on the PC monitor.

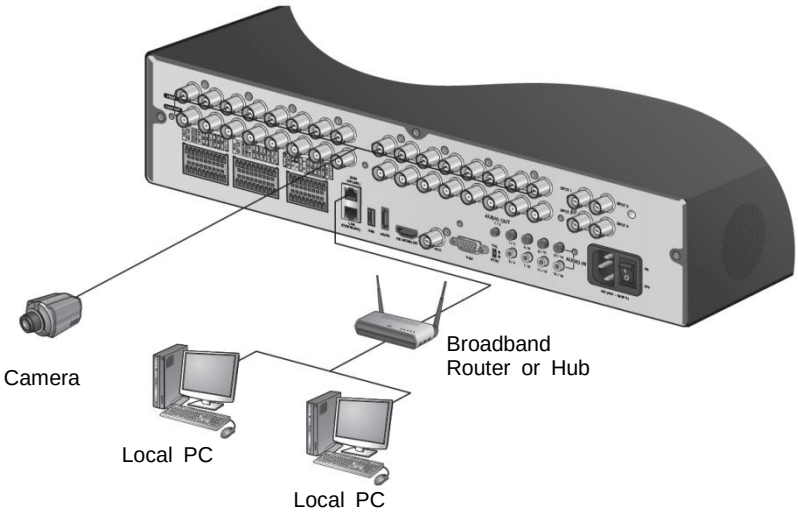

1. Connect the **[WAN(UPLINK)]** port in the rear panel to the router or hub.
2. Connect the local PC to the router or hub.

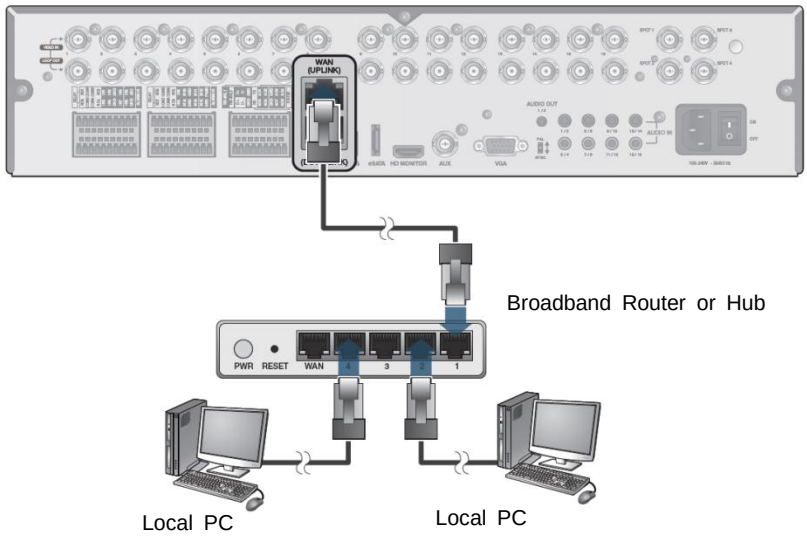

3. Enter the address in the Web browser of the local PC in the format of
   ″http://IP address:web service port ″.(Ex : http://192.168.
   1.23:8080) The web service port is set to 8080 by default. From the Network Setup screen, you can change the port number.
4. Provide the ID and password before logging in. Then, you can view the monitoring screen. Access ID (factory default) : ADMIN, P/W : 1234.
   - ✓ For the security purpose, change the password before you use the product for the first time after purchasing it.

PC connection from a remote network

You can connect DVR to a PC in the same network and control or manipulate it on the PC monitor

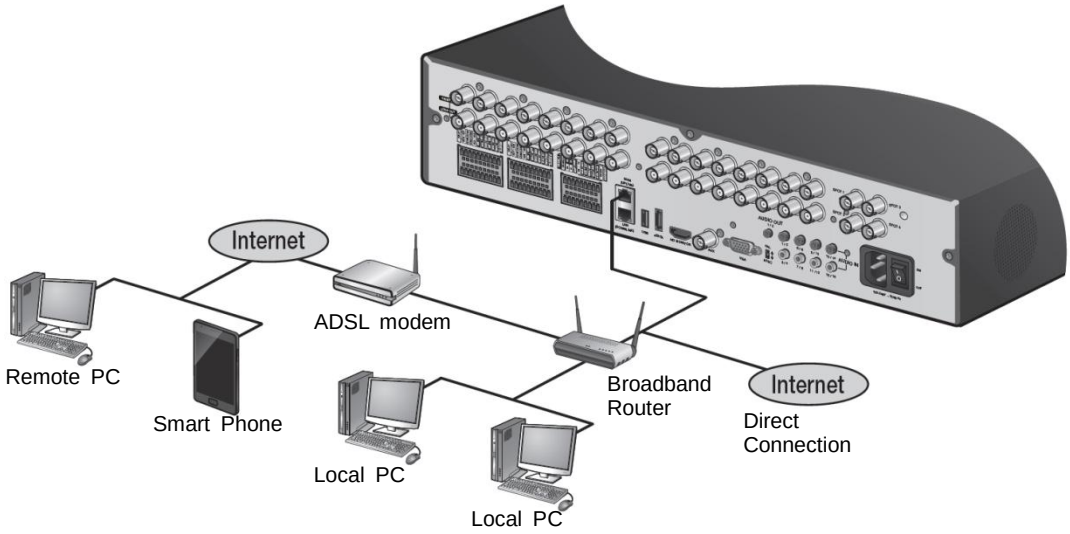

1. Connect the **[WAN(UPLINK)]** port in the rear panel to the router.

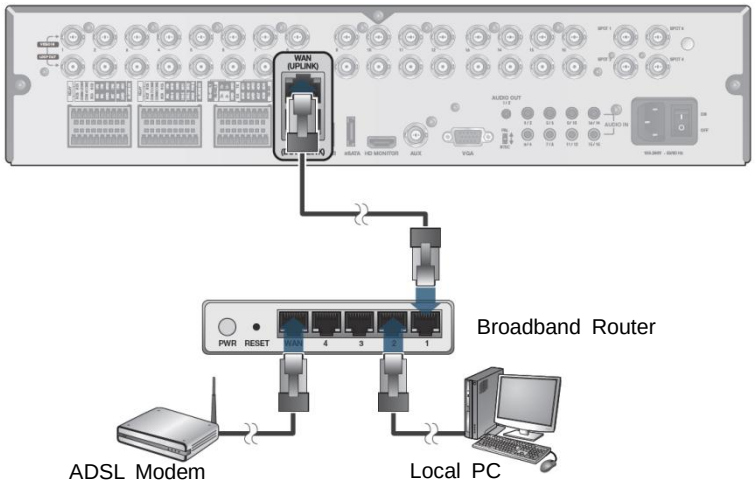

2. Connect the **[WAN(UPLINK)]** port of the router directly to the fixed IP LAN cable, or connect it to the ADSL modem.

3. If using the router, set the port forwarding and enter the DDNS address in the address bar (web browser) of the remote PC, or of the dedicated software program or mobile phone. For the IP and DDNS address settings, refer **"Operation manual"**.

4. If the MAC address of the DVR is 00-1C-B8-12-34-56 and the web port number is 8080, enter "http://001CB8123456.dvrlink.net:8080" in the address bar of the web browser.If you have renamed DDNS as "mydvr", you can make network connection athttp://mydvr.dvrlink.net:8080