FLIR®

Quick Connection Guide

T4325BN / T4350BN SERIES
Thermal Mini Bullet Camera

FLIR® Cloud™

PACKAGE CONTENTS:

1 x IP Bullet Camera

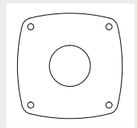
1 x Mounting Template

4 x Mounting Screws

4 x Drywall Anchors

2 x Allen Set Screws

1 x Allen Key

1 x RJ45 Waterproof Cap

Quick Start Guides

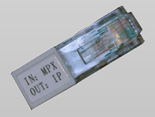

1 x MPX Terminator

1 Installing the Camera

A Use the included mounting template to mark holes for the screws.

B Drill holes for the mounting screws.

NOTE: Use the included drywall anchors if installing into drywall.

C Connect cables as shown in the section "Connecting the Camera".

D Mount the camera to the surface using the included mounting screws (4x).

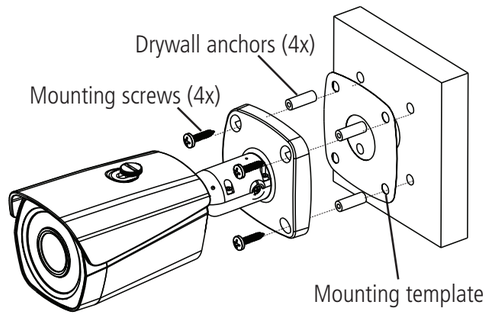

2 Adjusting the Camera

A Insert the included Allen set screws (2x).

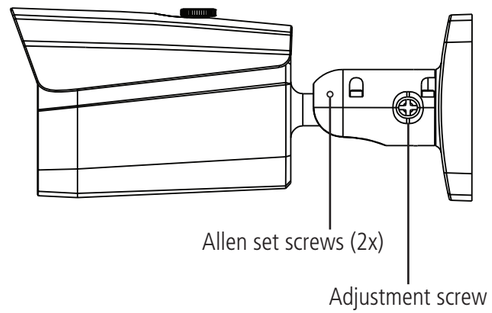

B Use a Phillips head screwdriver (not included) to loosen the adjustment screw on the camera stand.

C Move the camera to the desired position. Tighten the adjustment screw when finished.

D Tighten the Allen set screws with the included Allen key.

3 Connecting the Camera

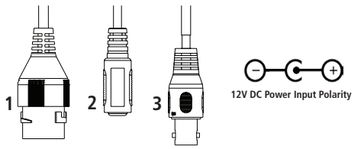

A IP / PoE

1. **Ethernet Port:** Connect the camera to a FLIR NVR or a router or switch on your network using Cat5e or better Ethernet cable (not included). PoE Class 3 supported.
2. **Power Input:** Connect a 12V DC power source if you are not using PoE.
3. **Video Out (BNC):** Analog video ouput to a test monitor (optional).

B MPX

1. **Ethernet Port:** Install the MPX Terminator. When you power up the camera with the MPX Terminator installed, the camera operates as an MPX camera.
2. **Power Input:** Connect a 12V DC power source (300mA or higher).
3. **Video Out (BNC):** Connect the camera to a FLIR MPX DVR. Video and MPX camera control are supported over a standard coaxial cable.

C Analog

1. **Ethernet Port:** Not used.
2. **Power Input:** Connect a 12V DC power source (300mA or higher).
3. **Video Out (BNC):** Connect the camera to an analog DVR.

Latest software and manuals available on

www.flir.com/security/support

For support, visit

www.flir.com/security/support

Information in this document is subject to change without notice. As our products are subject to continuous improvement, FLIR Systems, Inc. and our subsidiaries reserve the right to modify product design, specifications and prices, without notice and without incurring any obligation. E&OE © 2015 FLIR Systems, Inc. All rights reserved.

Weights & Dimensions

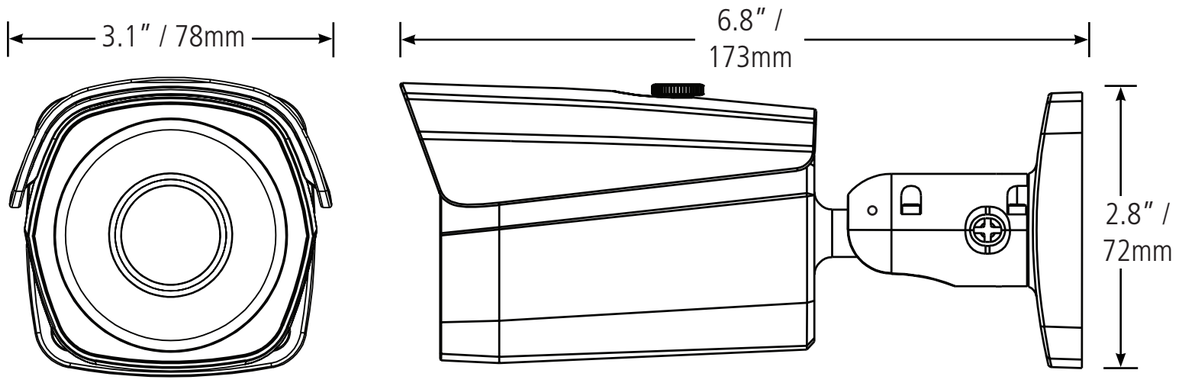

Weight

0.95lbs / 0.43kg

Safety Precautions

- Use an appropriate low voltage power cable to prevent fire or electrical shock.
- Make sure to install the camera in an area that can support the camera weight.
- There are no user serviceable parts inside the camera. Please do not disassemble the camera.
- Be careful not to leave fingerprints on the camera's infared optics. Clean only with low pressure fresh water and a lens cloth.
- Camera is rated for outdoor use (IP66), but is not intended for submersion in water.
- If using DC power, make sure to follow the correct polarity as marked on the power cable.

FCC Notice

This equipment has been tested and found to comply with the limits for a Class B digital device, pursuant to Part 15 of the FCC Rules. These limits are designed to provide reasonable protection against harmful interference when the equipment is operated in a commercial environment. This equipment generates, uses, and can radiate radio frequency energy and, if not installed and used in accordance with the instruction manual, may cause harmful interference to radio communications. Operation of this equipment in a residential area is likely to cause harmful interference in which case the user will be required to correct the interference at his own expense.

T4325BN_T4350BN_SERIES_QCG_EN_R1