VZ-BP3.8M

1/2” Pinhole Lens (Straight) 3.8mm F–2.4 C–Mount

Compatible with 1/2”, 1/3” Cameras

SPECIFICATIONS

Focal Length	3.8 mm
Maximum Relative Aperture	1:2.4
Iris	F2.4 - Close
Angular Field of View	80.2° x 64.6°
Image Format	6.4 x 4.8 mm (Ø8 mm)
Minimum Object Distance	1.0 m (From Front Vertex)
Object Dimensions at M.O.D.	168.4 x 126.4 cm

Optical Back Focal Distance		10.41 mm (In Air)
Flange Back		17.526 mm
Operation	**Focus**	Manual
	Iris	Manual
Operation Temperature		- 10 °C ~ 50 °C / 14 °F ~ 122 °F
Mount		C-Mount (Adjustable Lens Position)
Size, Weight		Ø30(W) x 72.9(D) mm, Approx. 75g

DIMENSIONS
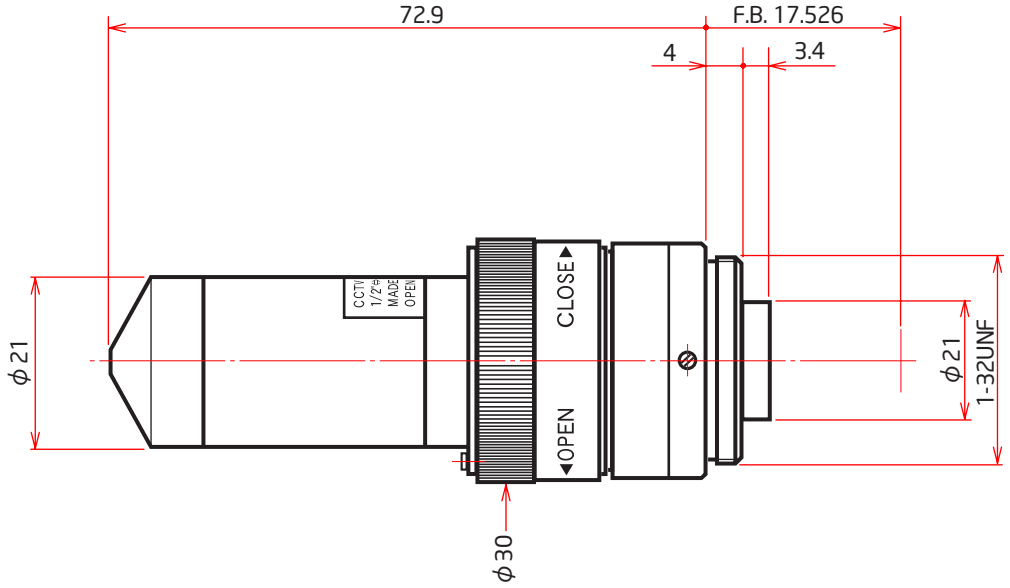
UNIT: mm