ViewZ®
www.viewzusa.com

VZ-17RTV

VALUE LED CCTV MONITOR

MODEL #		VZ-17RTV
VIDEO		
Screen Size		17”
Max. Resolution		1280 x 1024 @60Hz
Pixel Pitch		0.264 mm x 0.264 mm
Brightness		250cd/m²(Typical)
Contrast Ratio		1000:1
Aspect Ratio		5 : 4
Viewing Angle (H/V)		170°/160°
Display Color		16.7 Million
Response Time		< 5ms
Video System		NTSC / PAL
Frequency (H)		31 ~ 64Khz
Frequency (V)		50 ~ 75Hz
INTERFACE		
AV(Composite) In/ Out		2 / 2
RGB In(15Pin D-Sub)		1
HDMI1		1
Trigger In		1
AV(Composite) Sound In (RCA Type)		1
PC Stereo In		1
AUDIO		
Built in speaker		2W X 2
SPECIAL FEATURES		
Multi Display Function		PIP / PBP / VOV
Filter Type		3D Comb filter / De-Interlace
LCD Protection Glass		YES
Trigger Sensor		YES
Video Resolution(Max)		600 TV Line
Multi-lingual Language		English, Spanish, French, German, Italian, Portuguese, Dutch
DIMENSIONS & WEIGHT		
Outline Dimension (W x H x D)		15.35” x 13.15” x 2.64” 389.89 mm x 334.01 mm x 67.05 mm
Net / Gross Weight		12.79 lbs (5.8kg) / 16.76 lbs (7.6kg)
MOUNT		
VESA		100mm x 100mm, M4 x 10 Screws
GENERAL		
Transmitter - IR Remote Control		YES
Power	Electrical Ratings	DC 12V, 3A (AC100 ~ 240V[50/60Hz])
	Consumption (Typ/Max)	40 W
Warranty	Parts/ Labor	3 Year / 3 Year
	MTBF (Approx.)	50,000 Hours
Operating Temperature		32 - 104°F / 0 - 40°C
Regulations		UL, CB, FCC(B), CE-Emc(LVD)
Compatible Mounts	Wall	VZ-WM05, VZ-WM11, VZ-AM01
	Ceiling	VZ-CMKiT-01, VZ-CMKiT-02
	Rack	VZ-RMK08

VZ-17RTV ADVANTAGES

- 17” LED CCTV Monitor
- LCD Protection Glass
- BNC, VGA, HDMI
- 3D Comb-filter, De-interlace, Built-in Speakers
- 3-Year Warranty

DIMENSIONS

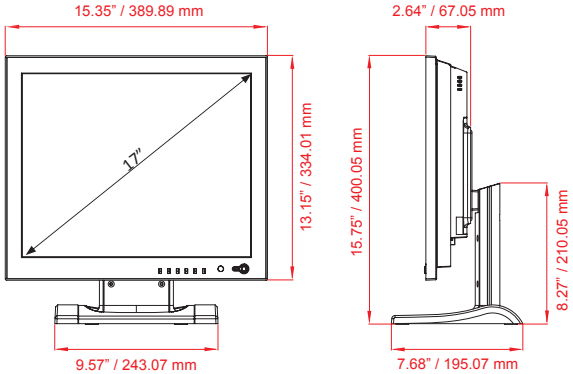

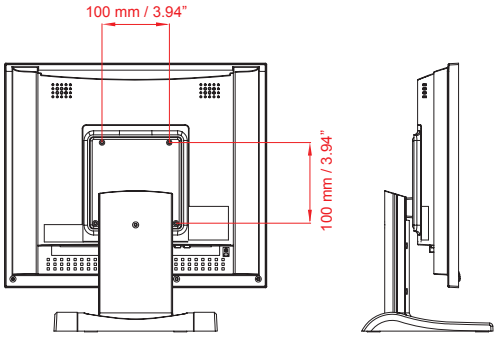

INTERFACE

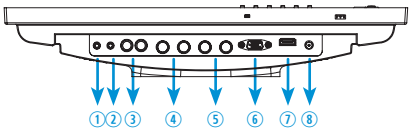

1. TRIGGER IN
2. PC STEREO IN
3. AV(composite) SOUND IN(R+L)
4. AV(composite)1 IN/OUT
5. AV(composite)2 IN/OUT
6. VGA IN
7. HDMI IN
8. DC 12V IN

Contact ViewZ

- Address : 177 W. Orangethorpe Ave., Placentia, CA 92870
- Phone : (714) 996-1177, Fax : (714) 996-1138
- Sales : sales@viewzusa.com

- Specification subject to change without notice.