EverFocus

EC900FIR

1080p Full HD True/Day Night
Corner Mount Camera with IR

eZ.HD

Resolution 1080p | True Day/Night | POWER 12VDC | 3DNR | Indoor

OSD | D-WDR | Sens-up | Vandal Proof | IR

Features

- 1/2.8” Sony IMX322 CMOS Image Sensor
- 1080p AHD Video Format
- Full Metal Front Cover for Anti-Vandalism
- 30 Covert IR LEDs (850nm)
- 2.9mm MP Lens
- True Day/Night with ICR
- AHD/CVBS Selectable through OSD Remote
- 12VDC

Specification

Model No.	ECMD900Fi		
Image Sensor	1/2.8" Sony IMX322 CMOS	Defog	Off/Auto
Total Pixel	1956(H) x 1266(V) 2.4M Pixels	Day & Night	Auto/Color/B&W/Extern.
Active Pixel	1944(H) x 1092(V) 2.1M Pixels	White Balance	ATW/AWC/Indoor/Outdoor/Man./AWB
Resolution	1080p	DNR	Off/Low/Middle/High
Video Output	AHD: 1080p/720p; Analog: NTSC/PAL CVBS	Mirror	Off/Mirror/V-Flip/Rotate
Min. Illumination	0.0001 Lux with IR on	Sharpness	0-10 Steps
Scanning System	Progressive	Privacy Mask	4 Masks
S/N Ratio	More than 50dB (AGC off)	Motion Detection	Off/On
AGC	Off/1-15	Language	English/Chinese/German/French Italian/Spanish/Polish/Russian/ Portuguese/Netherlands(Dutch) Turkish
Shutter Speed	Auto/Manual (1/50(60) ~ 1/50,000 sec)	Power Source	DC12V +/- 10%
SENS-UP	Off/X2 - X30	Power Consumption	Max 4.0 Watts with IR On Min 1.0 Watts with IR Off
Brightness	0 - 100	Operating Temperature	14℉ - 122℉ (-10℃ - 50℃)
Backlight	Off/BLC/HSBLC	Operating Humidity	10% - 85%
D-WDR	Off/On(0-8)/Auto	Dimensions	7.48"(W) x 1.67"(D) x 5.51"(H)

Dimensions

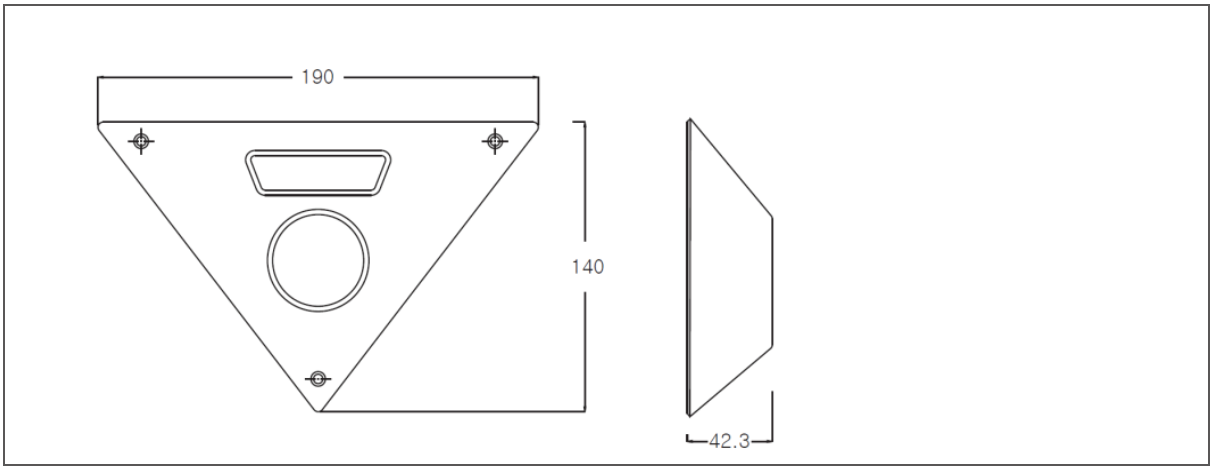

Find Out More At:

EverFocus Taiwan HQ:
TEL: +886 2 2698 2334
www.everfocus.com.tw
marketing@everfocus.com.tw

EverFocus USA - California:
TEL: +1 626 844 8888
www.everfocus.com
sales@everfocus.com

International Branch Offices:
Germany, China, Japan

EverFocus