ENFORCER®

For All Your Security Needs

46 years

Wireless • Access • Sensors • Security • CCTV and Accessories • Audio/Video • Vehicle Security

2016

FULL CATALOG

SECO-LARM®

www.seco-larm.com

Since 1971

ENFORCER®

For All Your Security Needs

When it comes to the business side of security, SECO-LARM is the right choice for distributors and dealers around the world.

This is true today more than ever. Just compare this catalog to our catalog of only a couple years ago and see our aggressive growth in the kind of products dealers and distributors need to serve the fast-changing requirements of customers, including completely new lines of high-end video cameras, DVRs, and access control equipment.

We at SECO-LARM have been developing, manufacturing, and selling state-of-the-art security and access control products for 46 years. Distributors and dealers in nearly 100 countries worldwide know they can count on us for a full range of access control, physical security, CCTV, A/V, and wireless components and solutions to satisfy their customers' requirements.

SECO-LARM means innovation, with security technologies built around 46 years of R&D experience and over 200 domestic and international patents.

We also provide the full range of marketing, pre-sales, and post-sales support and service needed to help ensure our dealers' customers and their assets receive the protection they require.

Whether it is security for customers at home, at work, or in their vehicles, count on SECO-LARM for the technology and support to get almost any security job done, and done right.

ADDRESS
16842 Millikan Avenue
Irvine, CA 92606

PHONE/FAX
(800) 662-0800
(949) 261-2999
Fax: (949) 261-7326

EMAIL
sales@seco-larm.com

WEB
www.seco-larm.com

CONTENTS

Access Control - Locking Devices	6-20
Access Control - Enter/Exit Devices	21-45
CCTV - Cameras	46-61
CCTV - Accessories	62-75
RF Wireless	76-81
Sensors	82-91
Burglar & Security	92-107
Audio & Video	108-115
Stand-Alone Security	116-121
Vehicle Security	122-125
Model Number Index	126-127

All-New Website

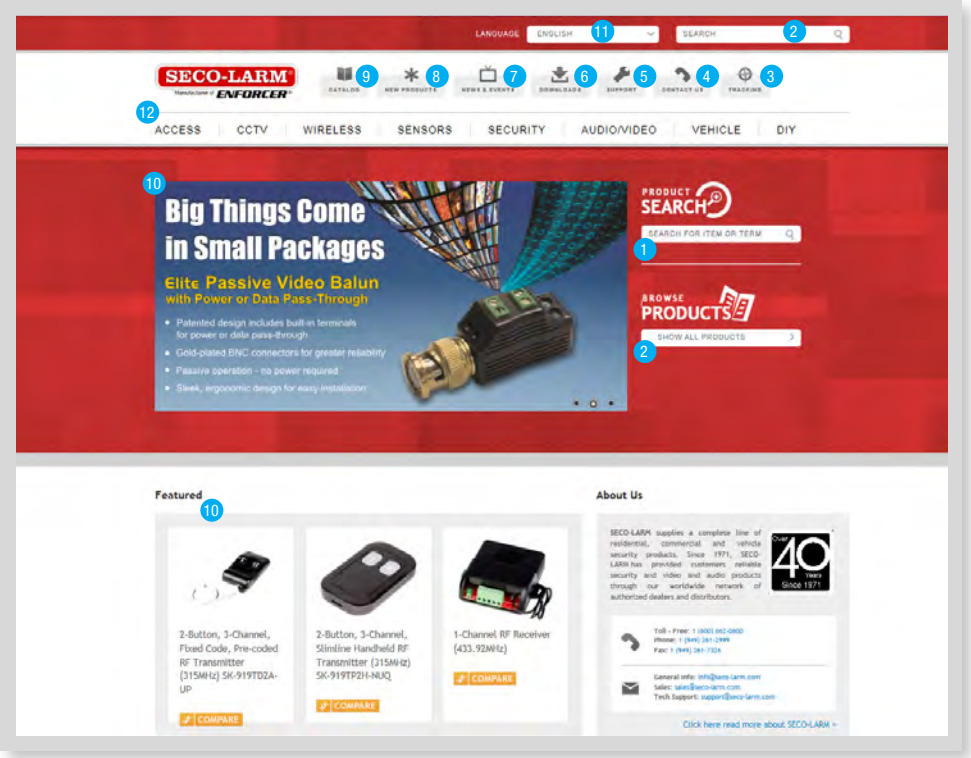

Desktop

Mobile

Our new, completely redesigned website is much more intuitive, more informative, and easier to use. Everything is right at your fingertips. You'll find our product search much easier to use. Type any part of a product name or model number and find what you want easily. Since you are often on the go, we now also offer a mobile version which includes the new search engine. Visit the new site and see for yourself!

1. Product Search
2. Browse Products
3. Tracking
4. Contact us
5. Support
6. Downloads
7. News & events
8. New Products
9. Catalog
10. Featured
11. Language
12. Product Catagories

Online Tracking

Our online tracking dialog lets you follow your order from the moment it is entered into our system. You don't even need to login to find the most current information about your order, including shipping and tracking information and your packing list.

UPGRADE your SECURITY

Vertical-Adjustment Door Strike

- Adjustable deadbolt keeper, deadlatch ramp and sliding shim to compensate for installation issues
- Operating voltage: 12/24 VAC/VDC
- Programmable fail-secure or fail-safe
- Includes 5 different stainless-steel faceplates

Horizontal-Adjustment Door Strike

- Adjustable keeper to compensate for installation issues
- Operating voltage: 8~16VAC, 12 VDC
- Fail-secure operation
- Stainless-steel faceplate: $4^{7}/_{8}$" x $1^{1}/_{4}$"

Door Strike for Wood Frames

- 12 or 24 VAC/VDC versions
- Programmable fail-safe or fail-secure operation
- Stainless faceplate: $^{15}/_{16}$" x $^{17}/_{16}$"

Door Strike for Metal Frames

- 12 or 24 VAC/VDC versions
- Programmable fail-safe or fail-secure operation
- Stainless steel faceplate: $4^{7}/_{8}$" x $1^{1}/_{4}$"

Universal Door Strike

- Operating voltage: 12/24 VAC/VDC
- Programmable fail-safe or fail-secure
- Includes three faceplates for nearly any type of door
- UL Listed 1034 Burglary

Basic Door Strike

- Operating Voltage: 10-14 VDC
- Fail-safe or fail-secure versions
- Aluminum faceplate: $5^{7}/_{8}$" x $1^{1}/_{8}$"
- Attractive baked painted finish

Reversible Door Strike

- Operating voltage: 8-16VAC, 12VDC
- Fail-secure operation
- Chrome faceplate: $5^{7}/_{8}$" x $1^{1}/_{4}$"
- Asymmetrical and symmetrical versions available

Surface Mount Rim Strike

- Use with rim-type exit devices
- Operating voltage: 12-28 VAC/VDC
- Lock and door status outputs
- 1,500-lb Jaw strength

SECO-LARM®
Manufacturer of ENFORCER®

16842 Millikan Ave.
Irvine, CA 92606

Tel: (949)261-2999
(800)662-0800

Email: sales@seco-larm.com
Website: www.seco-larm.com

1,200-lb Single-Door Maglocks

c UL us LISTED *

LIFETIME LIMITED WARRANTY

Features

- Anodized aluminum housing (US 28)
- Dual voltage: 12/24 VDC Operation
- No residual magnetism
- Detachable faceplate
- Adjustable mounting bracket
- MOV Surge protection
- Complete mounting hardware included

E-941SA-1K2PD Only:

- Built-in 1~78 second timer

E-941SA-1K2PQ and E-941SA-1K2PD Only:

- Status LED – Built-in 2-color LED shows lock status
- Built-in bond sensor with 3-amp dry relay output for monitoring door status
- 3A@12VDC SPDT Relay

LED	Status
Green	Door is closed and locked
Red	Door not closed and/or locked
Off	Door in use / No power

Specifications

Model		E-941SA-1200	E-941SA-1K2PQ	E-941SA-1K2PD
Holding force		1,200-lb (545kg)		
Operating voltage		12/24 VDC		
Current draw	12VDC	500mA		
	24VDC	250mA		
Coil resistance		48Ω±10% per coil		
Bond sensor relay		N/A	3A@12VDC	
Status LED		N/A	Yes	
Timer		N/A		1~78 sec
Operating temperature		14°~131° F (-10°~55° C)		
Dimensions	Magnet	10½"x1⅝"x2⅝" (268x42x67 mm)		
	Armature plate	7¼"x⅝"x2⅜" (185x16x61 mm)		
Weight		11-lb (5kg)		

Dimensions

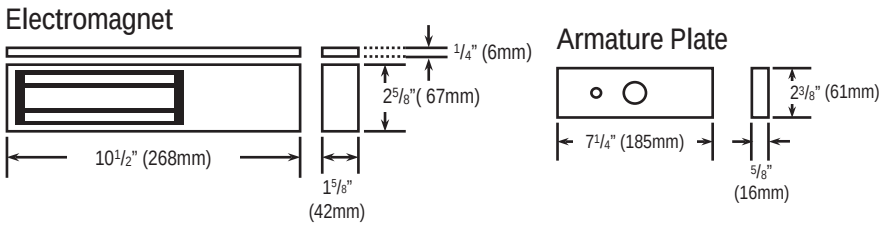

*E-941SA-1K2PD is not UL listed.

Model Numbers

E-941SA-1200
1,200-lb, single door, UL listed

E-941SA-1K2PQ
1,200-lb, single door, with bond sensor and status LED, UL listed

E-941SA-1K2PD*
1,200-lb, single door, with bond sensor, status LED, and timer

Accessories

E-941S-1K2/LQ
L-Bracket

E-941S-1K2/ZQ
Z-Bracket

E-941S-1K2/UQ
U-Bracket for glass doors

E-941S-1K2/PQ
Plate spacer

E-941S-1K2/HQ
Armature plate holder

E-941EC2-N1Q
Camera for 1,200-lb maglocks (see page 60 for details)

Applications

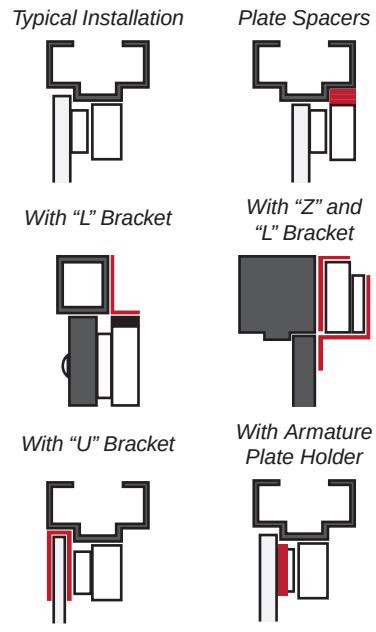

600-lb Single-Door Maglocks

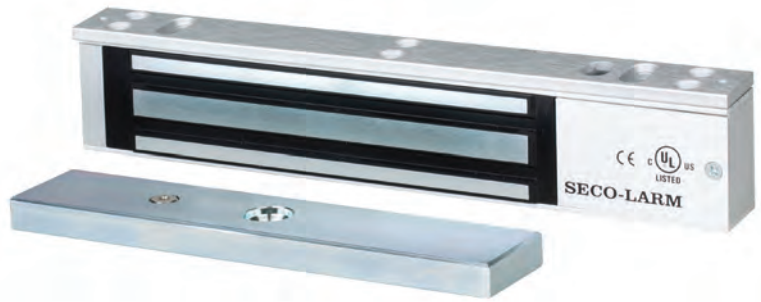

c UL us LISTED

LIFETIME LIMITED WARRANTY

Features

- Anodized aluminum housing (US 28)
- Dual voltage: 12/24 VDC Operation
- No residual magnetism
- Detachable faceplate
- Adjustable mounting bracket
- MOV Surge protection
- Complete mounting hardware included

E-941SA-600PQ Only:

- Status LED – Built-in 2-color LED shows lock/unlock status
- Built-in bond sensor with 3A dry relay output for monitoring door status
- 3A@12VDC SPDT Relay

LED	Status
Green	Door is closed and locked
Red	Door not closed and/or locked
Off	Door in use / No power

Specifications

Model		E-941SA-600	E-941SA-600PQ
Holding force		600-lb (272kg)	
Operating voltage		12/24 VDC	
Current draw	12VDC	500mA	
	24VDC	250mA	
Coil resistance		48Ω±10% per coil	
Bond sensor relay		N/A	3A@12VDC
Status LED		N/A	Yes
Operating temperature		14°~131° F (-10°~55° C)	
Dimensions	Magnet	9⅞"x1"x1⅝" (250x25x40 mm)	
	Armature plate	7¼"x½"x1½" (185x12x38 mm)	
Weight		4-lb 6-oz (2kg)	

Dimensions

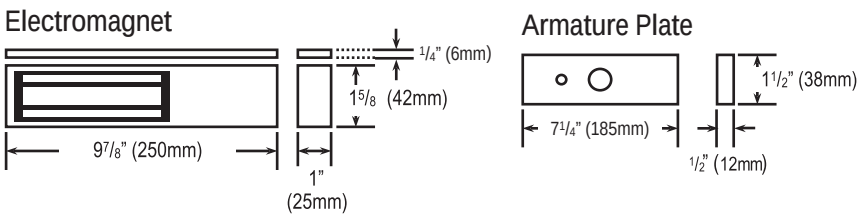

Model Numbers

E-941SA-600
600-lb, single door, UL listed

E-941SA-600PQ
600-lb, single door, with bond sensor and status LED, UL listed

Accessories

E-941S-600/LQ
L-Bracket

E-941S-600/ZQ
Z-Bracket

E-941S-600/UQ
U-Bracket for glass doors

E-941S-600/PQ
Plate spacer

E-941S-600/HQ
Armature plate holder

Applications

Typical Installation

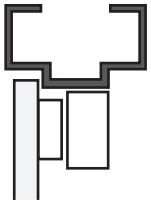

Plate Spacers

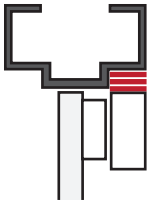

With "L" Bracket

With "Z" and "L" Bracket

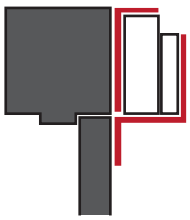

With "U" Bracket

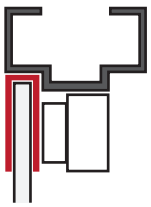

With Armature Plate Holder

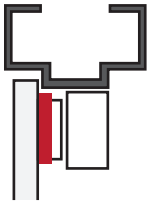

1,200-lb Double-Door Maglocks

c UL us LISTED

LIFETIME LIMITED WARRANTY

Features

- 1,200-lb Holding force for each door
- Anodized aluminum housing (US 28)
- Dual voltage: 12/24 VDC Operation
- No residual magnetism
- Detachable faceplate
- Adjustable mounting bracket
- MOV Surge protection
- Complete mounting hardware included

E-941DA-1K2P Only:

- Status LED – Built-in 2-color LED shows lock status
- Built-in bond sensor with 3-amp dry relay output for monitoring door status
- 3A@12VDC SPDT Relay for bond sensor

Specifications

Model		E-941DA-1K2Q	E-941DA-1K2P
Holding force		1,200-lb (545kg) per door	
Operating voltage		12/24 VDC	
Current draw	12VDC	500mA per door (1A total)	
	24VDC	250mA per door (500mA total)	
Coil resistance		48Ω ± 10% per coil	
Bond sensor relay		N/A	3A@12VDC
Status LED		N/A	Yes
Operating temperature		14°~131° F (-10°~55° C)	
Dimensions	Magnet	21"x1⅝"x2⅝" (536x42x67 mm)	
	Armature plate	7¼"x⅝"x2⅜" (185x16x61 mm)	
Weight		21-lb (10kg)	

Dimensions

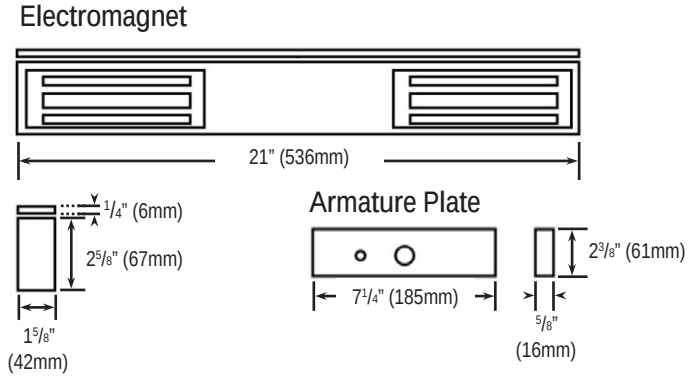

Model Numbers

E-941DA-1K2Q
1,200-lb, double-door, UL listed

E-941DA-1K2P
1,200-lb, double-door, with bond sensor and status LED, UL listed

LED	Status
Green	Door is closed and locked
Red	Door not closed and/or locked
Off	Door in use / No power

Accessories

E-941S-1K2/LQ
L-Bracket

E-941S-1K2/ZQ
Z-Bracket

E-941S-1K2/UQ
U-Bracket

E-941D-1K2/P
Plate spacer

E-941S-1K2/HQ
Armature plate holder

E-941EC2-N1Q
Camera for 1,200-lb maglocks (see page 60 for details)

Applications

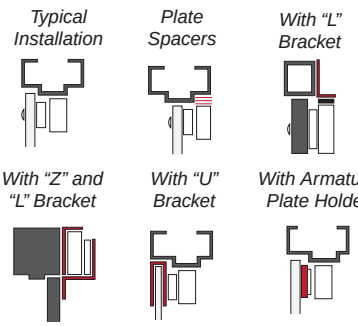

600-lb Double-Door Maglocks

c UL us LISTED

LIFETIME LIMITED WARRANTY

Features

- 600-lb Holding force for each door
- Anodized aluminum housing (US 28)
- Dual voltage: 12/24 VDC Operation
- No residual magnetism
- Detachable faceplate
- Adjustable mounting bracket
- MOV Surge protection
- Complete mounting hardware included

E-941DA-600PQ Only:

- Status LED - Built-in 2-color LED shows lock status
- Built-in bond sensor with 3-amp dry relay output for monitoring door status
- 3A@12VDC SPDT Relay for bond sensor

Specifications

Model		E-941DA-600Q	E-941DA-600PQ
Holding force		600-lb (272kg) per door	
Operating voltage		12/24 VDC	
Current draw	12VDC	500mA per door (1A total)	
	24VDC	250mA per door (500mA total)	
Coil resistance		48Ω±10% per coil	
Bond sensor relay		N/A	3A@12VDC
Status LED		N/A	Yes
Operating temperature		14°~131° F (-10°~55° C)	
Dimensions	Magnet	19 11/16"x1"x1 5/8" (500x25x40 mm)	
	Armature plate	7¼"x½"x1½" (185x12x38 mm)	
Weight		9-lb (4kg)	

Dimensions

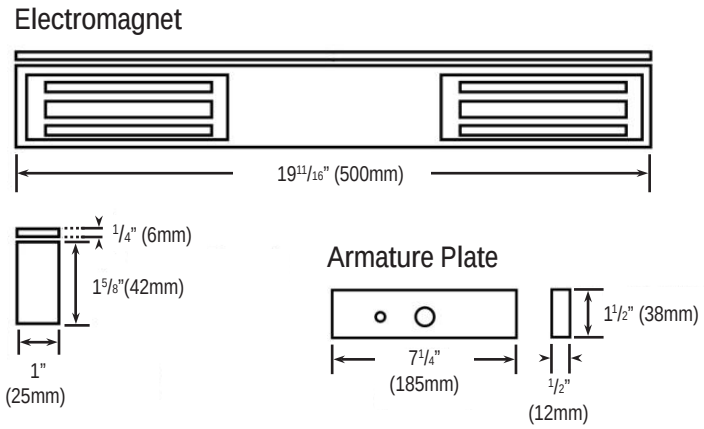

Model Numbers

E-941DA-600Q
600-lb, double-door, UL listed

E-941DA-600PQ
600-lb, double-door, with bond sensor and status LED, UL listed

LED	Status
Green	Door is closed and locked
Red	Door not closed and/or locked
Off	Door in use / No power

Accessories

E-941S-600/LQ
L-Bracket

E-941S-600/ZQ
Z-Bracket

E-941S-600/UQ
U-Bracket

E-941D-600/PQ
Plate spacer

E-941S-600/HQ
Armature plate holder

Applications

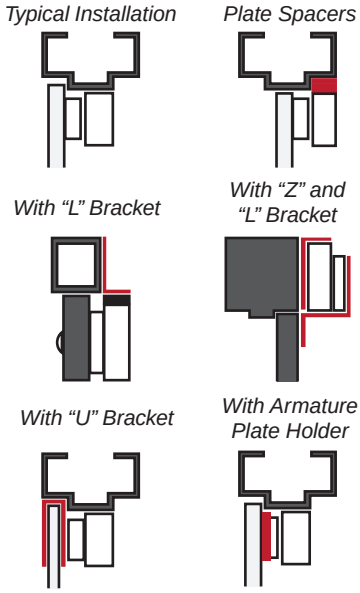

1,500-lb Single-Door Maglock

Model Number

NEW

E-941SA-1K5Q*
1500-lb Holding force@12/24VDC

Features

- No residual magnetism
- Adjustable mounting bracket
- MOV surge protection
- Anodized aluminum housing (US 28)
- Complete mounting hardware included
- "L" bracket and "Z" brackets available for easy mounting
- 12/24VDC selectable
- Detachable faceplate

300-lb Single-Door Maglock

Model Number

E-941SA-300*
300-lb Holding force, indoor/outdoor use

Features

- No residual magnetism
- Adjustable mounting bracket
- MOV Surge protection
- Complete mounting hardware included
- Weatherproof for outdoor use
- Pre-wired 36" (91cm) cable
- 12VDC Operation
- Stainless-steel housing
- Dimensions
  - Magnet: 6¾"x1"x1¼ (170x25x32 mm)
  - Armature Plate: 6"x$^{3}/_{8}$"x1¼" (152x10x32 mm)

300-lb Single-Door Maglock

Model Number

E-941SA-300RQ*
300-lb Holding force, indoor use only

Features

- No residual magnetism
- Adjustable mounting bracket
- MOV Surge protection
- Complete mounting hardware included
- Anodized aluminum housing (US 28)
- Reversible installation
- Detachable faceplate
- 12/24 VDC Operation
- Optional mounting brackets available
- Dimensions
  - Magnet: $7^{7}/_{8}$"x1"x$1^{3}/_{8}$" (200x25x35 mm)
  - Armature Plate: 6"x$^{3}/_{8}$"x1¼" (152x10x32 mm)

80-lb Single-Door Maglock

Model Number

E-941SA-80Q
80-lb Holding force@12VDC
110-lb Holding force@24VDC

Features

- No residual magnetism
- Adjustable mounting bracket
- MOV Surge protection
- Anodized aluminum housing (US 28)
- For small, minimum security doors including cabinets and drawers
- 12~24 VDC Operation
- Detachable mounting bracket for easy installation
- Current draw
  - 12VDC: 85mA
  - 24VDC: 165mA
- Dimensions
  - Magnet: $2^{3}/_{4}$"x$^{13}/_{16}$"x$1^{1}/_{4}$" (70x20x32 mm)
  - Armature Plate: $2^{3}/_{8}$"x$^{3}/_{8}$"x$1^{1}/_{4}$" (60x10x32 mm)

*For additional information on the **SECO-LARM**® Maglock Accessories see page 11.

Mounting Brackets

Z-Brackets

Model Numbers:	Compatible with:
E-941S300R/ZQ	E-941SA-300RQ
E-941S-600/ZQ	E-941SA-600, E-941SA-600PQ, E-941DA-600Q, E-941DA-600PQ
E-941S-1K2/ZQ	E-941SA-1200, E-941SA-1K2PQ, E-941SA-1K2PD, E-941DA-1K2Q, E-941DA-1K2P, E-941SA-1K5Q

L-Brackets

Model Numbers:	Compatible with:
E-941S300R/LQ	E-941SA-300RQ
E-941S-600/LQ	E-941SA-600, E-941SA-600PQ E-941DA-600Q, E-941DA-600PQ
E-941S-1K2/LQ	E-941SA-1200, E-941SA-1K2PQ E-941SA-1K2PD, E-941DA-1K2Q E-941DA-1K2P
E-941S-1K5/L NEW	E-941SA-1K5Q

U-Brackets

Model Numbers:	Compatible with:
E-941S300R/UQ	E-941SA-300RQ
E-941S-600/UQ	E-941SA-600, E-941SA-600PQ E-941DA-600Q, E-941DA-600PQ
E-941S-1K2/UQ	E-941SA-1200, E-941SA-1K2PQ, E-941SA-1K2PD, E-941DA-1K2Q E-941DA-1K2P, E-941SA-1K5Q

Plate Spacers

Model Numbers:	Compatible with:
E-941S300R/PQ	E-941SA-300RQ
E-941S-600/PQ	E-941SA-600, E-941SA-600PQ
E-941S-1K2/PQ	E-941SA-1200, E-941SA-1K2PQ
E-941S-1K5/P NEW	E-941SA-1K5Q
E-941D-600/PQ	E-941DA-600Q, E-941DA-600PQ
E-941D-1K2/P	E-941DA-1K2Q, E-941DA-1K2P

Armature Plate Holders

Model Numbers:	Compatible with:
E-941S-600/HQ	E-941SA-600, E-941SA-600PQ, E-941DA-600Q, E-941DA-600PQ
E-941S-1K2/HQ	E-941SA-1200, E-941SA-1K2PQ, E-941SA-1K2PD, E-941DA-1K2Q, E-941DA-1K2P, E-941SA-1K5Q

Note: Brackets and spacers not available for E-941SA-300

Electromagnetic Gate Locks

E-942FC-600

E-942FC-1300

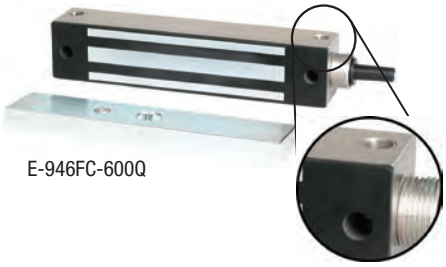

E-946FC-600Q

Face and surface mounting

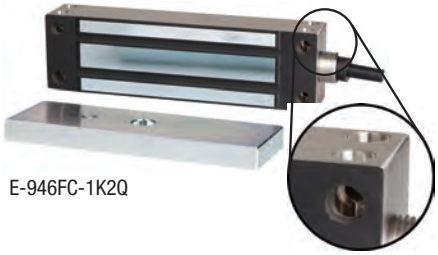

E-946FC-1K2Q

Face and surface mounting

Model Numbers

E-942FC-600
600-lb Holding force, face-mount

E-942FC-1300
1,200-lb Holding force, face-mount

E-946FC-600Q
1,200-lb Holding force, face and surface mount

E-946FC-1K2Q
1,200-lb Holding force, face and surface mount

Dimensions

E-942FC-600 & E-946FC-600Q:

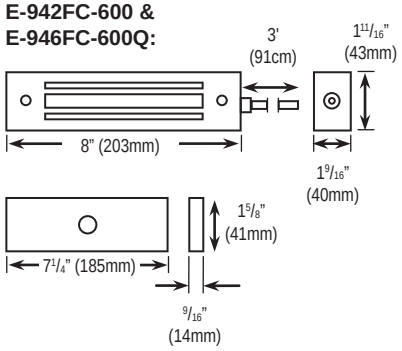

E-942FC-1300:

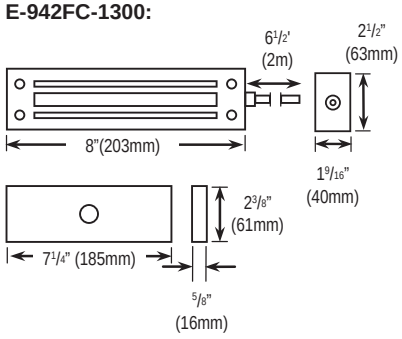

Features

- Face or surface mounting
- For indoor & outdoor applications
- For sliding or swinging gates
- Water resistant and vandal resistant
- Maintenance-free, factory-sealed design
- Dual-threaded conduit fitting
- Attractive stainless-steel housing
- Dual voltage: 12/24 VDC Operation
- 6½ ft (2m) Hookup cord (E-946FC-1K2Q and E-942FC-1300)
- 3ft (91cm) Hookup cord (E-946FC-600Q and E-942FC-600)
- No residual magnetism
- MOV Surge protection
- Complete mounting hardware included
- "L" and "Z" brackets available
- Current draw
  - 12VDC: 500mA
  - 24VDC: 250mA

Accessories

E-942F-600/L
L-Bracket for:
E-942FC-600
E-946FC-600Q

E-946F-1K2/LQ
L-Bracket for:
E-946FC-1K2Q

E-942F-1300/L
L-Bracket for:
E-942FC-1300

E-942F-600/Z
Z-Bracket for:
E-942FC-600
E-946FC-600Q

E-942F1300/ZQ
Z-Bracket for:
E-942FC-1300
E-946FC-1K2Q

Weldable Magnetic Gate Locks

E-942FC-600SQ

E-942FC-1K3SQ

E-946FC-1K2SQ

Model Numbers

E-942FC-600SQ
600-lb Holding force, face mounting

E-942FC-1K3SQ
1,200-lb Holding force, face mounting

E-946FC-1K2SQ
1,200-lb Holding force, face and surface mounting

Features

- For sliding or swinging gates
- Weld or bolt brackets directly to the gate
- Brackets are zinc-plated for corrosion resistance
- Water resistant and vandal resistant
- Maintenance-free, factory-sealed design
- Dual-threaded conduit fitting
- Anodized aluminum housing (US 28)
- Dual voltage: 12/24 VDC Operation
- No residual magnetism
- MOV Surge protection

Specifications

Model		E-942FC-600SQ	E-942FC-1K3SQ	E-946FC-1K2SQ
Holding force		600-lb (272kg)	1,200-lb (544kg)	
Operating voltage		12/24 VDC		
Current draw	12VDC	500mA		
	24VDC	250mA		
Operating temperature		14°~131° F (-10°~55° C)		
Dimensions	Magnet	8"x1 1/16"x1 9/16" (203x43x40 mm)	8"x2 1/2"x1 9/16" (203x63x40 mm)	8 11/16"x2 1/2"x1 9/16" (220x63x40 mm)
	Armature plate	7 1/4"x9/16"x1 5/8" (185x14x41 mm)	7 1/4"x5/8"x2 3/8" (185x16x61 mm)	7 1/4"x5/8"x2 3/8" (185x16x61 mm)

Mounting Diagram

E-942FC-1K3SQ, E-942FC-600SQ
(Face Mount)

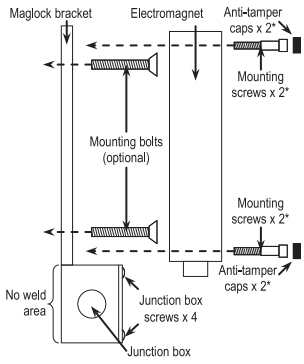

E-946FC-1K2SQ
(Surface Mount)

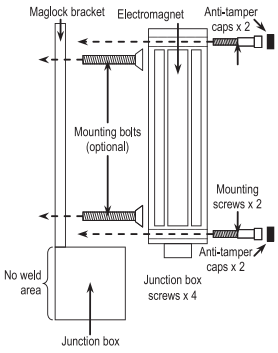

Armature Mounting
(All Models)

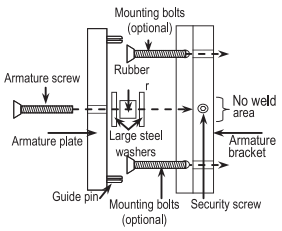

Dimensions

E-942FC-600SQ:

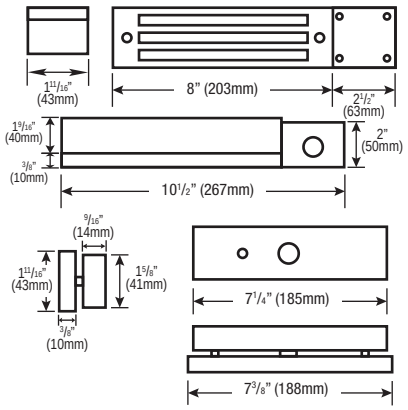

E-942FC-1K3SQ:

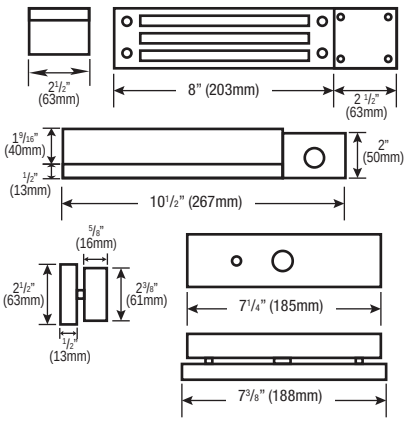

E-946FC-1K2SQ:

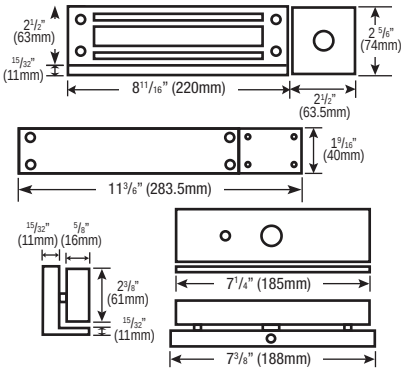

Electric Door Strikes

SD-995C / SD-995C24

SD-994C / SD-994C24

Features

- Field-programmable in just seconds for fail-safe or fail-secure applications
- Can be used with virtually any cylindrical door locking system
- Use with an optional digital keypad
- Suitable for office-type applications
- Symmetrical-sized, reversible for right-hand or left-hand doors
- Shallow design for use with most doors
- Powered by a solenoid, not a buzzer coil
- Jaw strength – 2,000 lbs
- Stainless-steel lip (keeper) for strength and long life
- Non-polarized connection; wires can be reversed
- Tested to 1 million cycles
- Includes trim plate to hide gaps in installation
- Optional lip-extension brackets available:
  - SD-995C-LE25 – 1" Extension
  - SD-995C-LE50 – 2" Extension
- Dimensions:
  - SD-995C/SD-995C24 $4^{7}/_{8}$"x$1^{1}/_{4}$"x$1^{1}/_{4}$" (124x32x32 mm)
  - SD-994C/SD-994C24 $7^{15}/_{16}$"x$1^{7}/_{16}$"x$1^{1}/_{4}$" (202x36x32 mm)

Model Numbers

SD-995C
Fail-safe/fail-secure, 12VDC, for metal doors

SD-995C24
Fail-safe/fail-secure, 24VDC, for metal doors

SD-994C
Fail-safe/fail-secure, 12VDC, for wood doors

SD-994C24
Fail-safe/fail-secure, 24VDC, for wood doors

Accessories

SD-995C-LE25
Lip extender, 1" (25mm)

SD-995C-LE50
Lip extender, 2" (50mm)

SD-995JA-11Q
Frame preparation jig

Trim Plate Included

Trim plate included for cleaner installations.

Basic Electric Door Strikes

Features

- Converts cylindrical lock sets into an electronic access-controlled locking system
- Can be used on virtually any cylindrical door locking system
- Combine with an optional digital keypad such as the SECO-LARM SK-1011-SDQ for keyless high security
- Baked painted finish
- Use fail-secure (SK-990AQ) units for entrance door installations
- Use fail-safe (SK-990BQ) units for emergency door and escape door installations
- Input voltage: 10~14 VDC
- Current draw:
  - SK-990AQ: 450mA
  - SK-990BQ: 200mA

Model Numbers

SK-990AQ
Fail-secure, 12VDC, for wood doors

SK-990BQ
Fail-safe, 12VDC, for wood doors

Dimensions

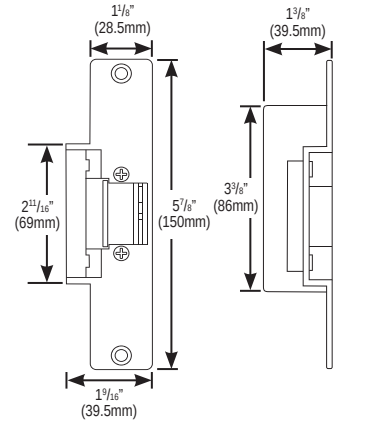

Electric Door Strikes (Reversible)

Model Numbers

SD-994A-A1AQ NEW
Asymmetrical plate, Fail-secure

SD-994A-A1SQ NEW
Symmetrical plate, Fail-secure

Specifications

Current draw	16VAC	800mA
	12VDC	750mA
Operating temperature		14°~113° F (-10°~45° C)
Weight		10.3-oz (292g)
Operating voltage		8~16 VAC/12VDC
Operation		Fail secure

Dimensions

SD-994A-A1AQ **SD-994A-A1SQ**

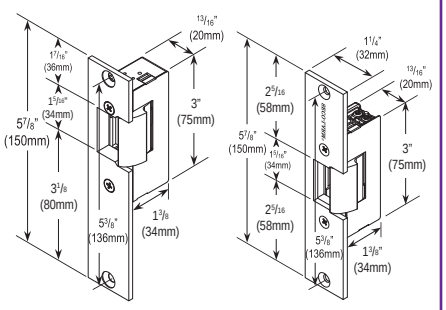

Features

- 8~16 VAC/12VDC Operation
- Can be used on virtually any mortise or cylindrical door locking system
- Fail-secure operation
- Powered by a solenoid
- US26D Bright chrome faceplate
- Miniature lock body for easier installation
- Face Plate Size: 5⅞"x1¼"x⅛" (150x32x3.2 mm)
- Zinc alloy faceplate
- Frame type - wood
- Corrosion-resistant case and moving parts
- Tamper strength test - 1000lbs (454kg)
- Cycle test - 500,000 cycles
- Keeper depth 21/32" (16.8mm) maximum latch projection possible with ⅛"door / frame clearance - ¾"
- Strike depth 1½" Overall
- Non-handed
- Current draw
  - 750mA@12VDC
  - 800mA@16VAC

Electric Door Strike (Horizontal Adjustment)

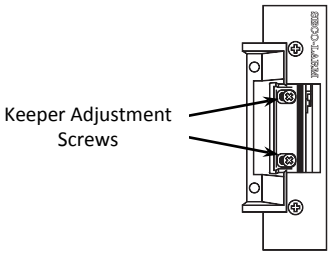

Model Number

SD-995A-A1Q NEW
8~16 VAC/12VDC, Fail-Secure

Accessory

SD-995RE-21Q NEW
Optional Faceplate, Stainless Steel 7 15/16"x1 1/4"x1/8" (202x32x3.2 mm)

Specifications

Current draw	16VAC	800mA
	12VDC	750mA
Operating temperature		14°~113° F (-10°~45° C)
Weight		10.3-oz (292g)
Max. Latch throw		5/8" (16mm)
Strike depth		1 1/2" overall (38mm)
Adjustable keeper		Max. 1/4" (6mm)
Faceplate dimensions		4 7/8"x1 1/4"x1/8" (124x32x3.2 mm)

Features

- ¼" Horizontal keeper adjustment compensates for installation difficulties such as warped doors, different-sized latch bolts, etc.
- Unique design accommodates both wood and metal doors
- Fail-secure operation
- Reversible for right or left-handed doors
- Durable stainless-steel faceplate
- Miniature lock body for easier installation
- Corrosion-resistant case and moving parts
- Complete mounting hardware included
- Screw terminals for ease of wiring
- Operating voltage: 8~16VAC/12VDC
- 1,000-lb (453kg) Jaw strength
- Tested to 500,000 cycles
- Current draw: 750mA@12VDC
- Keeper depth: 21/32" (16.8mm)
- Latch depth: ¾" (19mm)
- Strike depth: 1½" (38mm)
- ANSI Faceplate size:
  - 4 7/8"x1¼"x1/8" (124x32x3.2 mm)
- Optional ANSI Faceplate SD-995RE-21Q:
  - 7 15/16"x1¼"x1/8" (202x32x3.2 mm)

Universal Door Strike

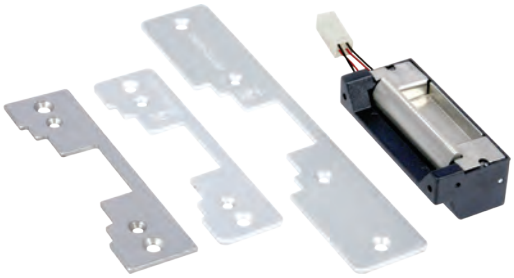

SECURITY UL LISTED

Features

- Includes three faceplates for nearly any kind of door
- Listed under UL 1034 Burglary
- Field-selectable fail-safe or fail-secure operation
- Convert cylindrical lock sets into electronic access control systems
- Use on virtually any cylindrical door locking system
- Dual voltage: 12/24 VDC Operation
- Current draw: 280mA@12VDC, 140mA@24VDC
- Jaw strength – 2,000 lbs
- Powered by a solenoid
- Stainless-steel lip for added strength and longer life
- Reversible non-handed design
- Low profile – strike has a depth of only 1¼" for use with hollow aluminum frames
- Easily connects to an optional keypad
- Trim plate Included
- Faceplate dimensions:
  - Aluminum: 4⅞"x1¼" (124x32 mm)
  - Hollow metal: 4⅞"x1¼" (124x32 mm)
  - Wood: 7$^{15}/_{16}$"x1$^{7}/_{16}$" (202x37 mm)

Model Number

SD-996C-NUQ
Fail-safe/fail-secure, 12 or 24 VDC

Accessories

SD-995C-LE25
Lip extender, 1" (25mm)

SD-995C-LE50
Lip extender, 2" (50mm)

NEW

SD-995JA-11Q
Frame preparation jig for electric door strikes

Specifications

Operating voltage		12 or 24 VDC ±15%
Current draw	12VDC	280mA
	24VDC	140mA
Operating temperature		0°~120°F (-18°~49° C)
Operating humidity		85% ±15%

Electric Door Strikes (Vertical Adjustment)

SD-996C-U1VQ

SD-996C-NUVQ

Features

- Vertical adjustable deadbolt opening, sliding shim keeper, and deadlatch ramp accommodates a wide range of lock types
- Accommodates deadbolts up to 1"
- Field selectable for fail-safe or fail-secure
- Reversible non-handed design fits either right-hand or left-handed doors
- Convert cylindrical lock sets into electronic access control systems
- Use on virtually any cylindrical door locking system
- Includes 5 different stainless-steel faceplates
- Includes trim plate to hide gaps in installation
- Powered by a solenoid
- Jaw strength –1,500-lb
- Tested to 1 million cycles
- Low current draw (250mA@12VDC)

Model Numbers

NEW

SD-996C-U1VQ
12 VAC/VDC
Fail-Safe/Fail-Secure

NEW

SD-996C-NUVQ
12/24 VAC/VDC
Fail-Safe/Fail-Secure

Specifications

Model	SD-996C-U1VQ	SD-996C-NUVQ
Current draw	250mA@12VDC	250mA@12VDC 150mA@24VDC
Operating temperature	14°F~113°F (-10°~45° C)	
Operating humidity	0~95%	
Jaw Strength	1,500-lb	
Latch throw	1" (25mm) max with ⅛" (3mm) door gap	
Dimensions	1$^{13}/_{16}$"x1$^{5}/_{8}$"x3$^{5}/_{16}$" (47x42x84 mm)	
Weight	1-lb 5.8-oz (618g)	

5 Faceplates Included:

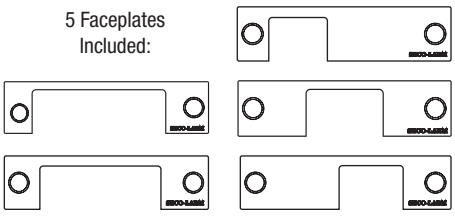

Surface-Mount Electric Rim Strike

Model Number

NEW

SD-998C-NUQ
Fail Safe/ Fail Secure, 12 or 24 VDC

Specifications

Operating voltage		12/24 VDC
Current draw	12VDC	540mA
	24VDC	270mA
Operating temp.		14°~113° F (-10°~45° C)
Operating humidity		0~95%
Lock mode		Fail-Safe / Fail-Secure
Static force		1,500-lb
Dimensions		8"x1 3/4"x 3/4" (203x45x19mm)

Features

- Dual Voltage: 12/24VDC Operation
- Non-polarized connection
- 1,500-lb Jaw strength
- ¾ " (19mm) thick metal housing
- Accommodates up to ¾ " Pullman latch
- Current draw: 540mA@12VDC/270mA@24VDC
- Dynamic strength 70 ft-lbs.
- Field-programmable for fail-safe or fail-secure operation
- For ANSI standard fire doors
- Horizontal adjustment
- Metal construction
- Metal or wood frames installation
- Surface-mount installation
- Rated for 250,000 cycles (Factory test for 1,000,000 cycles)
- Works with standard rim-type exit devices including SECO-LARM SD-962AR-36A, SD-962AR-36G, and SD-962AR-36M*
- Five-year limited warranty

Application

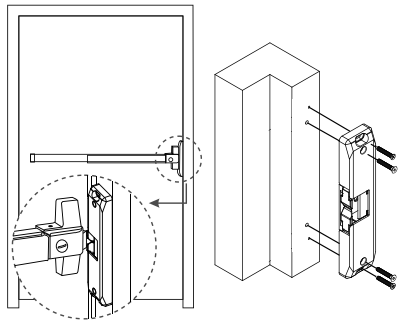

Weatherproof Door Gate Strike

Model Number

NEW

SD-995A-D3Q
Fail Secure, 12VAC/VDC

Specifications

Operating voltage	12VAC/VDC
Current draw	310mA@12VDC
Operating temp.	14°~113° F (-10°~45° C)
Operating humidity	0~95%
Lock Mode	Fail-Secure
Dimensions	3 1/2"x1 7/16"x2 5/8" (89x35x67 mm)

Features

- Weatherproof
- For use in wood jambs or metal gate posts
- One piece cast body
- 12VAC/VDC Operation
- Fail-Secure
- Low current
- Compatible with most locksets
- Extra wide keeper 1 5/8"

*For additional information on the **SECO-LARM**® Rim Exit Bars please turn to pages 36.

Electric Deadbolts

SD-997B-GBQ

SD-997A-GBQ

Incorporates manual lock/unlock cylinder

Features

- Adds concealed deadbolt security to most wood or hollow metal doors, with the convenience of electrical operation
- Stainless-steel bolt, ⅝" (16mm) diameter and ⅝" (16mm) throw
- Magnetic switch senses door position for positive locking
- Attempts to relock multiple times if the door is not closed properly
- Door open/close monitor (NO/NC/COM)
- Solenoid shuts off if door is not closed properly
- Adjustable door lock delay timer
- Easily connects with an optional keypad

SD-997A-GBQ Only:

- Incorporates manual lock/unlock cylinder to operate lock if power is lost, (turn lock knob from inside protected premises and/or use key from outside protected premises)

Specifications

Model		SD-997A-GBQ	SD-997B-GBQ
Operation		Fail-secure	Fail-safe
Operating voltage		12/24 VDC	
Current draw	12VDC	880mA	900mA
	24VDC	470mA	440mA
Manual lock/unlock		Yes	No
Relay rating		SPDT, 250mA@12VDC (NO/NC/COM)	
Adjustable delay timer		0/3/5/9 seconds	0/2.5/5/9 seconds
Weight		2-lb 5-oz (1kg)	1-lb 13-oz (0.8kg)

Dimensions

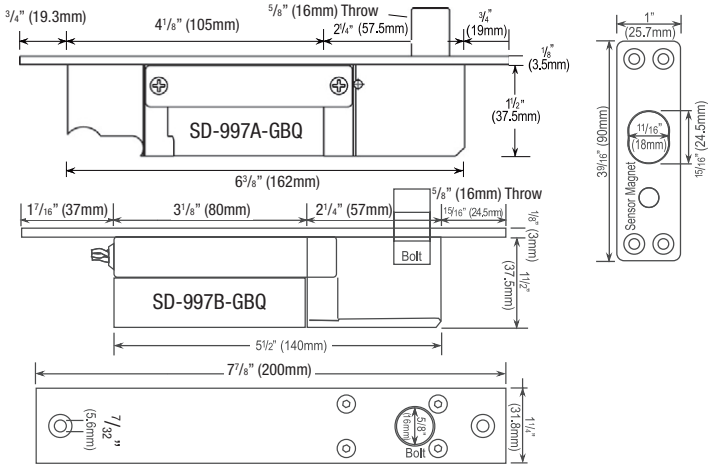

Model Numbers

SD-997B-GBQ
Fail-safe, 12/24 VDC

SD-997A-GBQ NEW
Fail-secure, 12/24VDC, with manual lock/unlock

Accessories

SD-997SMB-AQ
Surface mount bracket kit for SD-997B-GBQ

SD-997UB-AQ*
U-Bracket for glass doors for SD-997-GBQ

**Must use with SD-997SMB-AQ.*

Accessory Mounting Diagrams

Mounting with the SD-997SMB-AQ:

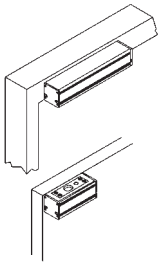

Mounting with the SD-997UB-AQ:

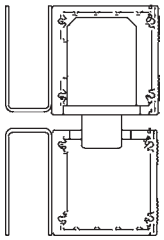

Applications

For single doors

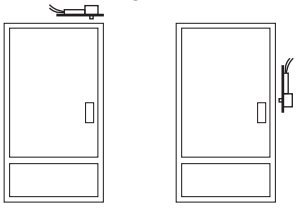

Top mount *Side mount*

For double doors

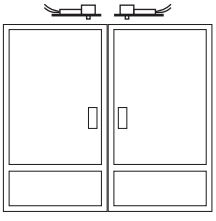

Mini Electric Deadbolt (Surface Mount)

Model Number

SD-997B-1SQ
12VDC, Fail-safe operation

Specifications

Operation		Fail-safe
Operating voltage		12VDC
Current draw	Standby	237mA@12VDC max.
	Active	650mA@12VDC max.
Status sensor		250mA@30VDC (NC/COM)
Adjustable lock delay timer		0/3 s (default)
Operating Temperature		32°~158° F (0°~70° C)
Weight		1-lb 2.5-oz (450g)

Dimensions

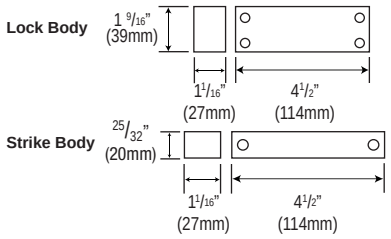

Features

- Adds deadbolt security to smaller doors and cabinets, with the convenience of electrical operation
- Surface-mount design for easy installation
- Aluminum-alloy bolt, 15/32" (13mm) diameter and 9/16" (14mm) throw
- Easily connects with an optional keypad
- Magnetic switch senses door position for positive locking
- Automatically relocks after 6 seconds if the lock was unlocked but the door was not opened
- Door open/close monitor (NO/NC/COM) and adjustable door lock delay timer (0~3 seconds)

Electric Deadbolt Cabinet Lock

Model Number

NEW

SD-997C-GCQ
12/24 VDC, Fail-safe/Fail-secure

Specifications

Operating voltage		12/24 VDC
Current draw	12VDC	300mA
	24VDC	150mA
Contact Switch		NO/NC.
Lock status		Micro-switch
Lock status rating		1A@30VDC
Door status		Reed switch
Door status max		10W
Door status max switching contact		0.5A
Dimensions		3 1/4"x1 3/16"x1 1/8" (82x30x28 mm)

Dimensions

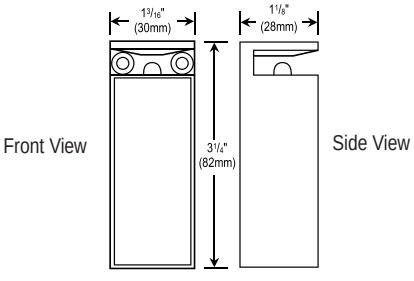

Features

- Electronically secure lockers, cabinets, cases, and drawers
- Lock status sensor allows for monitoring whether doors are open
- Selectable fail-safe/fail-secure operation
- Operating voltage: 12/24VDC
- Current draw: 300mA@12VDC, 150mA@24VDC
- N.O., N.C. Rated contacts
- Mounting hardware included

Magnetic Door Holders

DH-171SQ

DH-151SQ

SECURITY UL LISTED

Features

- For use with door closers to control the release and closing of residential, commercial, and public area doors
- Adjustable armature plate reduces installation time and adjusts to door alignment changes
- Surface-mount or flush-mount models available
- Fail-safe operation
- Low profile design
- Holding force – 33-lbs (15kg)
- Three voltages: 12VAC/VDC, 24VAC/VDC, and 120VAC
- Extension bars available: ½", ¾", 1", 2", 3", 4"
- Cast aluminum faceplate
- No residual magnetism for easy release
- Built-in voltage spike suppressor
- Use with SECO-LARM door closers SD-C121-S, SD-131-SQ, SD-C101-SGQ, SD-C101-SBAQ, or SD-C101-SBBQ

Model Numbers

DH-171SQ NEW
Flush-mount

DH-151SQ NEW
Surface-mount

Specifications

Model	DH-171SQ	DH-151SQ
Installation	Flush-mount	Surface-mount
Current draw	52mA@12VAC, 60mA@12VDC	
	27mA@24VAC, 31m@24VDC	
	24mA@120VAC	
Holding Force	33-lb (15kg)	
Magnet box dimensions	$2^{3}/_{4}$"x$4^{9}/_{16}$"x$2^{1}/_{16}$" (70x116.5x52 mm)	$2^{3}/_{4}$"x$4^{9}/_{16}$"x3" (70x116.5x76 mm)
Door armature dimensions	$2^{9}/_{16}$"x$2^{9}/_{16}$"x $1^{9}/_{16}$" (65x65x40 mm)	
Magnet box weight	1-lb 6.4-oz (635g)	1-lb 1.5-oz (496g)
Door armature weight	8.3-oz (235g)	
Operating voltage	12VAC/VDC, 24VAC/VDC, 120VAC	

1,500-lb Electric Shear Lock

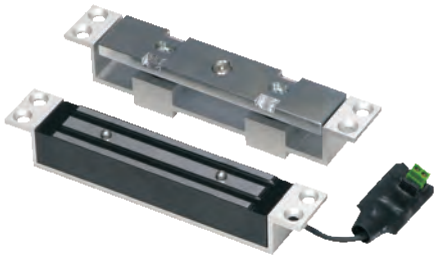

Features

- Concealed security for remote access control with aluminum or steel doors and gates
- Small size for use with most metal door jambs
- Works with sliding, single- action, and double-action doors and gates
- Fail-safe operation
- Spring-loaded locking bolts and magnetic bond hold door securely in place with approximately 1,500-lb (680kg) of shear holding force
- Anodized aluminum housing
- Armature plate adjusts to compensate for gaps between door and frame

Dimensions

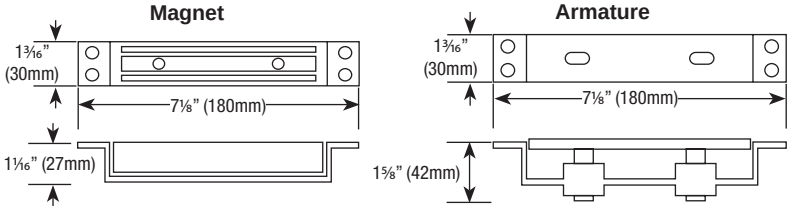

Model Number

SD-993B-SS
12/24 VDC, fail-safe operation, 1,500-lbs holding force

Accessories

SD-993S-SB
Surface mount bracket kit for SD-997B-GBQ

SD-993S-UB
U-Bracket for glass doors for SD-997-GBQ

Specifications

Operating Voltage		12VDC or 24VDC
Current draw	12VDC	420mA
	24VDC	210mA
Door Gap		Max. 1/16" (2mm)
Weight (Approx.)		2lb 8-oz (1.1kg)

Armored Door Cords (Removable Covers)

SD-969-T15Q/S
(Silver finish)

SD-969-M15Q/B
(Bronze finish)

Model Numbers

SD-969-T15Q/S: Silver NEW
Door cord with Terminal Blocks

SD-969-T15Q/B: Bronze NEW
Door cord with Terminal Blocks

SD-969-M15Q/S: Silver NEW
Door cord with Removable Cover

SD-969-M15Q/B: Bronze NEW
Door cord with Removable Cover

Specifications

Model	SD-969-T15Q/S	SD-969-M15Q/S
	SD-969-T15Q/B	SD-969-M15Q/B
Cord Length	15" (39cm)	
Terminal Block	Yes	No
Maximum Current	3A@30VAC/VDC	N/A
Construction	Stainless-steel armored	
Outside Diameter	5/16" (8mm)	
Inside Diameter	7/16" (11mm)	

Features

- Designed to conduct power to electric locks or access systems mounted in doors
- Once mounted, to access simply remove cover. Door cord stays in place. No need to remove door cord from the door. Prevents stripping of the screws and mounting points
- Surface mount
- 15" (39cm) Stainless-steel armored cable
- Security screws (included) to prevent tampering
- Available in bronze and silver finish
- Terminal blocks with pre-wired cables (8 connections) for quick, easy, and secure installation (SD-969-T15Q)

Terminal Block Wiring Diagram

(SD-969-T15Q only)

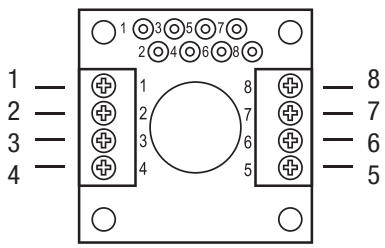

Armored Door Cords

SD-969-S18

SD-969-A18

Model Numbers

SD-969-S18
Aluminum capped, 18"

SD-969-A18
Plastic capped, 18"

Specifications

Model	SD-969-S18	SD-969-A18
End cap	Aluminum	Plastic
Cord Length	18" (45cm)	
Construction	Stainless-steel armored	
Inside door cord diameter	5/16" (8mm)	
Outside door cord diameter	7/16" (11mm)	1/2" (13mm)

Features

- Designed to conduct power to electric locks or access systems installed in doors
- Surface mount
- Stainless-steel armored cable
- Mounting screws included

Push-to-Exit Bar

Model Number

SD-961A-36
Push-to-Exit bar

Specifications

Circuit type	2 NO/NC Contacts
Contact rating	5A@125VAC
Door size	For 36" doors
Dimensions	34½"x2¾"x2$^{13}/_{32}$" (876x70x61 mm)
Weight	7-lb (3kg)

Features

- New end caps come off and go on in seconds.
- Designed to allow egress from inside an area normally locked by an electric lock or electromagnetic lock, and/or to disarm (shunt) or trigger an alarm when the door is opened.
- Pushing the bar at any point sends a signal to release the lock and/or sound an alarm.
- For 36 inch doors (actual length is 34.5 inches).
- Rugged, heavy-duty construction.
- Includes 2 built-in non-latching (momentary), dual-contact switches (NO/COM/NC), rated 5A@125VAC.
- Attractive brushed-aluminum bar with black base and trim.
- Includes SECO-LARM SD-969-A18 Armored Door Cord, and mounting hardware (for mounting in wood or metal doors).
- Designed for easy cutting in field to match width of non-standard-sized doors

Dimensions

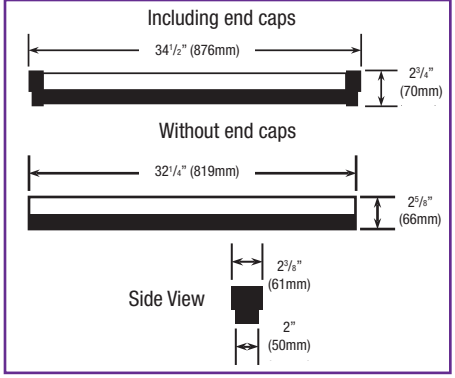

Delayed Egress Timer

Model Number

SA-025EQ
Delayed egress timer

Specifications

Operating voltage		12~24 VAC/VDC
Current draw	Standby	120mA@12VDC
	Pre-delay	90mA@12VDC
	Local alarm	35mA@12VDC
	Timer module only	15mA@12VDC
Lock control output		10A@24VDC, Form C, NO/NC/COM
Remote alarm output		10A@24VDC, Form C, NO/NC/COM
Local alarm output		Transistor ground, 500mA@12VDC

Features

- 3 Relock modes to meet different installation requirements
  - Standard manual relocking
  - BOCA (Building Officials Code Administrators) relocking
  - Timed relocking (1~60 sec)
- Programmable nuisance delay timer (0~3 sec)
- Adjustable pre-delay timer (1~30 sec)
- Adjustable post-delay timer (1~30 sec)
- Selectable manual or automatic relocking after power loss
- Door status input
- Status LEDs show relay status
- Bypass input immediately releases locks
- Free egress input allows easy egress during the delay
- Works with SD-961A-36 and other electrical push-to-exit bars

Dimensions

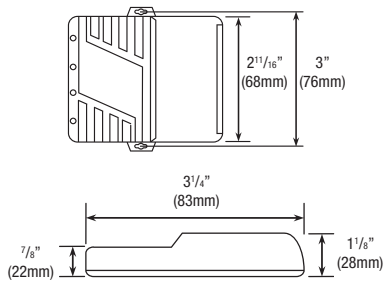

7-Day Timer

Features

- Enclosed terminals for a safer installation
- 12~24 VAC/VDC Operation
- Backup battery: 1x CR-2016 (included)
- Holiday function (up to 99 days)
- Easy-to-read backlit LCD
- Adjustable output time
- Programmable security code
- 12 or 24-Hour clock format
- 16 Schedules including daily, weekly, weekends, etc
- Memory saved if power fails
- Form C relay output (10A@120VAC/28VDC)
- Egress input terminal
- Mode selection button for manual relay operation

Model Number

SA-027WQ

Specifications

Operating voltage	12~24 VAC/VDC
Current draw	Standby: 15mA@12VDC Active: 70mA@12VDC
Relay rating	10@120VAC/28VDC
Weight	4.6-oz (130g)
Dimensions	4¾6"x3⅛6"x1¼" (107x78x31 mm)

Other Timers Available

SA-025Q*
Multi purpose timer
- *Adjustable from 1 second to 60 mins*

SA-026Q*
Mini Timer
- *Adjustable from 1 second to 3 mins*

*See page 101 for more details

365-Day Annual Timer

Features

- Enclosed terminals for safer installation
- 2 N.O. Or N.C. Form C relays
- Each relay can be programmed for 50 events, total of 100 individual programmable events
- 100 Programmable events can be set weekly, daily, or hourly 365 days a year
- Password protection can be turned ON/OFF
- One egress input per relay (2 total)
- Block programming allows events to be repeated on consecutive days
- Event output can be shunt or momentary; momentary programmable for 1~99 sec
- 10 Programmable holidays
- Tandem mode allows both relays to operate simultaneously
- Built-in back-up battery charger for external back-up battery use
- Memory saved if power fails
- Compensates for leap years
- Set for standard or Daylight Savings Time
- Alpha-numeric, back-lit LCD display, and simple button layout for easy programming

Model Number

SA-027HQ

Specifications

Operating voltage		12~24 VAC/VDC
# Of Relays		2
Relay rating		10A@120VAC/28VDC
Current draw		70mA
# Of Events		50 for each relay, 100 total
Blue LED	ON	Power is ON
	OFF	Power is OFF
# Of Holidays		10
Battery charging current		90mA
Security code		4-digits, numeric, ON/OFF
Weight		5.8-oz (164g)
Dimensions		4¾6"x3⅛6"x1¼" (107x78x31 mm)

Other Timers Available

SA-025Q*
Multi purpose timer
- *Adjustable from 1 second to 60 mins*

SA-026Q*
Mini Timer
- *Adjustable from 1 second to 3 mins*

Indoor Access Control Keypad

LIFETIME LIMITED WARRANTY

Features

- Output – Form C relay, 1A@30VDC, 1,000 users
- Super user code gives admin access to keypad
- All features are programmed directly from the keypad: No need for an external programmer
- Up to 50 possible temporary visitor codes, which can be programmed for one-time or limited-time use (1~99 hours)
- 12~24 VAC/VDC Auto-adjusting operation
- Programmable output time (Up to 99,999 seconds)
- Programmable egress input with optional warning alarm and delayed egress
- Real-time clock to auto-disable access at specific times
- Indoor keypad
- Mounts to a standard single-gang back box (surface-mount back box included)

Model Number

NEW

SK-1011-SDQ
1,000 Users, 1 relay output

Specifications

Operating voltage		12~24 VAC/VDC
Current draw (12VDC)	Standby	15mA
	Total max current draw	90mA
Outputs	Form C	1A@30VDC
	Tamper	50mA@24VDC
Inputs	Egress	N.O. Ground
Operating temperature		-4°~158° F (-20°~70° C)
Dimensions (including back box)		4⅝"x2⅞"x1½" (117x73x38 mm)
Weight		6-oz (170g)

Indoor Access Control Keypad

LIFETIME LIMITED WARRANTY

Features

- 4 Available programmable access modes for all 3 outputs: card only, code only, card and common user code, card and unique user code
- Three relay outputs (two Form C relay, 1A@30VDC and one Transistor ground, 100mA@24VDC), 1,200 users total
- Programmable output time (Up to 99,999 seconds)
- Super user code gives admin access to keypad
- Up to 50 possible temporary visitor codes, which can be programmed for one-time or limited-time use (1~99 hours)
- Programmable egress input with optional warning alarm and delayed egress
- 12~24 VAC/VDC Auto-adjusting operation
- Built-in proximity reader. 125kHz (EM125)
- Real-time clock to auto-disable access at specific times
- Duress code signals a silent alarm if an authorized user is forced to open the door under duress
- Mounts to a standard single-gang back box (surface-mount back box included)
- Illuminated keypad with programmable status LEDs
- Door sensor input for anti-tailgating operation
- Door-propped-open warning
- Door-forced-open warning
- Door open warning and alarm

Model Number

NEW

SK-1131-SPQ
1,200 Users, 3 relay outputs, built-in proximity card reader

Specifications

Operating voltage		12~24 VAC/VDC
Current draw (12VDC)	Standby	66mA
	Total max current draw	160mA
Outputs	#1 - Form C	1A@30VDC
	#2 - Form C	1A@30VDC
	#3 - Transistor ground	100mA@24VDC
	Tamper	50mA@24VDC
Inputs	Egress	N.O. Ground
	Door sensor	N.C. Ground
	Door inhibit	N.O. Ground
Proximity reader frequency		125kHz (EM125)
Proximity reader sensing distance		1½" (38mm)
Operating temperature		-4°~158° F (-20°~70° C)
Dimensions (including back box)		4⅝"x2⅞"x1½" (117x73x38 mm)
Weight		6-oz (170g)

Split-series Keypad (w/ Proximity Reader)

Features

- Split-Series keypad - keypad and control board are separated for high security applications
  - Only Power and data I/O are sent from keypad to control board - no way to manually activate relay from keypad without a valid access code
- Built-in Proximity card reader. 125kHz (EM125)
- 1,200 Users over 3 Outputs. Codes may be 4-8 digits.
- 12~24VDC Operation
- Built-in Door chime
- 4 available programmable access modes for all outputs: card only, code only, card and common user code, card and unique user code
- Up to 50 possible temporary visitor codes
- Programmable lock out/duress output after 5-10 failed key-in attempts
- Programmable egress input
- Real-time clock
- Alarm outputs for tamper, door-forced-open, and door propped open

Model Number

SK-4131-SPSQ NEW
Split-series keypad with built-in proximity card reader

Accessories

PR-K1S1-A
Proximity Cards (EM125)
(Sold in packs of 10)

PR-K1K1-AQ
Proximity Keyfob (EM125)
(Sold in packs of 10)

Flush-Mount Outdoor Access Keypad

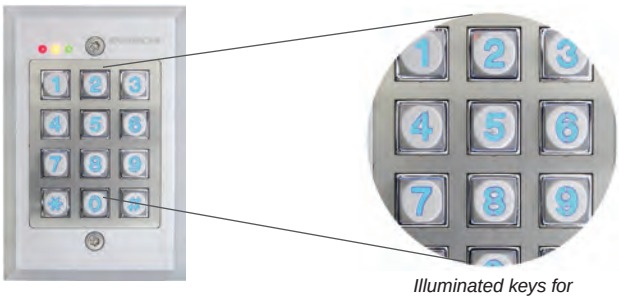

Illuminated keys for easy anytime use

Features

- 1,100 Users over 2 Outputs. Codes may be 4~8 digits
- Super user code gives admin access to keypad
- Up to 50 (01~50) possible temporary visitor codes, which can be programmed for one-time or limited-time use (1~99 hours)
- Programmable egress input with optional warning alarm and delayed egress
- Real-time clock to auto-disable access at specific times
- Up to 50 (01~50) duress codes for output #1 and 10 (01~10) for output #2
- Duress code signals a silent alarm if an authorized user is forced to open the door under duress
- IP66 Weatherproof Rating
- Programmed directly from the keypad: No need for an external programmer
- Mounts to a standard single-gang back box (surface-mount back box included)
- Durable and attractive stainless steel faceplate
- Keypad illuminates when a button is pressed; backlight can be programmed for FULL, AUTO, or OFF in standby mode
- Mantrap: for a protected area with two doors, this feature allows only one door to be open at a time
- Door sensor input for anti-tailgating operation
- Door-propped-open warning
- EEPROM Memory protects programmed information in case of power loss

Model Number

SK-1123-FDQ
110 users, 2 outputs, weatherproof

Specifications

Operating voltage		12~24 VAC/VDC
Current draw	Standby	66mA
	Key pressed	93mA
	Relay active	Output 1: 99mA Output 1&2: 126mA
Outputs	#1 - Form C	1A@30VDC
	#2 - Form C	1A@30VDC
	Timer	Active for up to 99,999 seconds (nearly 28 hours)
Relay output		1A@30VDC
Transistor ground output		100mA@24VDC
Egress		N.O. Ground
Door sensor input		N.C. Ground
Dimensions		$4^{15}/_{16}$"x$3^{1}/_{8}$"x$2^{1}/_{16}$" (125x79x52 mm)
Weight		1-lb, 2-oz (520g)

Mullion-Style Outdoor Keypads

SK-2323-SDQ &
SK-2323-SPQ

SK-2323-SPAQ

Features

- 1,010 Users (Output #1: 1,000 users, Output #2: 10 users)
- 2 Form C relay outputs, each rated 1A@30VDC
- Each relay has programmable output time from 1~99 seconds or toggle
- Output #2 can be programmed for use with a doorbell
- 2 Egress inputs; 1 door sensor input
- Backlit keys for easy nighttime use
- Status LEDs show when a relay is active
- All features are programmed directly from the keypad—no need for an external programmer
- EEPROM memory prevents data loss
- IP65 Weatherproof, rugged aluminum construction
- Optical tamper sensor for added security
- Circuitry is potted with epoxy for outdoor use

SK-2323-SPQ Only

- Built-in 125kHz proximity reader
- 3 Programmable access modes for Output #1: Card Only, Card or Code, and Card with Code
- Output #2 may have either a card or a code programmed for each user
- Dimensions:
  - 6"x1¾"x$^{15}/_{16}$" (152X44X24 mm)

SK-2323-SPAQ Only

- Similar to SK-2323-SPQ, but with the following additional features:
  - Piezoelectric touch keys
  - Lower profile: ⅜" (10mm)
  - No moving parts allow for heavy use

Wiring Diagram

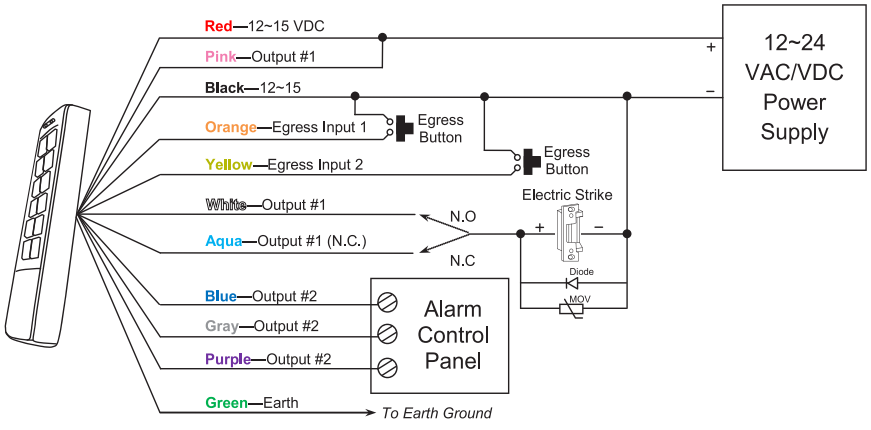

Model Numbers

SK-2323-SDQ
Mullion-style keypad

SK-2323-SPQ
Mullion-style keypad with built-in proximity card reader

SK-2323-SPAQ
Mullion-style piezoelectric keypad with built-in proximity card reader

Accessories

PR-K1S1-A
Proximity Cards (EM125)
(Sold in packs of 10)

PR-K1K1-AQ
Proximity Keyfob (EM125)
(Sold in packs of 10)

Specifications

Operating voltage		12~24 VAC/VDC
Current draw	Standby	64mA@12VDC
	Active	120mA@12VDC (Max)
Relay outputs		1A@30VDC Form C NO/NC/COM
Egress inputs	Input #1	N.O. ground
	Input #2	N.O. ground
Door sensor input		N.C. ground
Tamper sensor		Optical
Operating temperature		-4°~122° F (-20°~50° C)
Keypad LED life		60,000 hours (over 6.8 years)

Dimensions

SK-2323-SDQ:

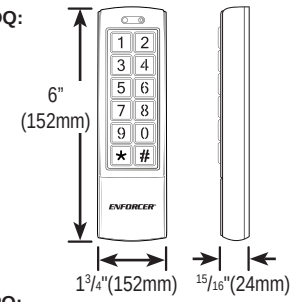

SK-2323-SPQ:

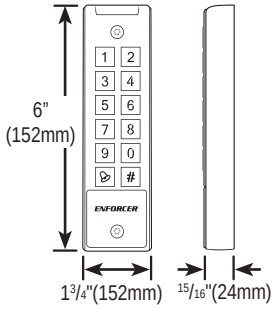

Sealed-Housing Outdoor Keypads

SK-1323-SPQ

SK-1323-SDQ

Features

- 1,010 Users (Output #1: 1,000 users, Output #2: 10 users)
- 2 Form C relay outputs, each rated 1A@30VDC
- All features are programmed directly from the keypad—no need for an external programmer
- EEPROM memory prevents data loss
- Optical tamper sensor for added security
- Circuitry is potted with epoxy for outdoor use
- IP65 Weatherproof, rugged aluminum construction
- Status LEDs show when a relay is active
- Each relay has programmable output time from 1~99 seconds or toggle
- Output #2 can be programmed for use with a doorbell
- 2 Egress inputs; 1 door sensor input
- Backlit keys for easy nighttime use

SK-1323-SPQ Only

- Built-in 125kHz proximity reader
- 3 Programmable access modes for Output #1: Card Only, Card or Code, and Card with Code
- Output #2 may have either a card or a code programmed for each user

Wiring Diagram

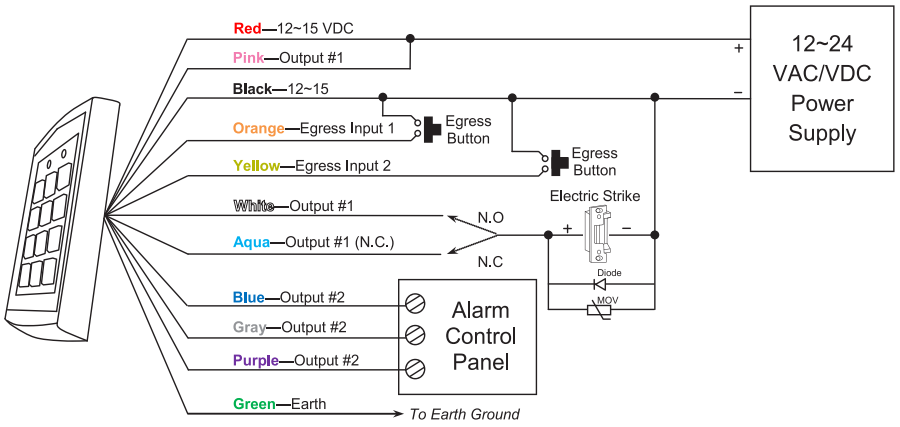

Model Numbers

SK-1323-SDQ
Standard keypad

SK-1323-SPQ
Standard keypad with built-in proximity card reader

Accessories

PR-K1S1-A
Proximity Cards (EM125)
(Sold in packs of 10)

PR-K1K1-AQ
Proximity Keyfob (EM125)
(Sold in packs of 10)

Specifications

Operating voltage		12~24 VAC/VDC
Current draw	Standby	64mA@12VDC
	Active	120mA@12VDC (Max)
Relay outputs		1A@30VDC Form C NO/NC/COM
Egress inputs	Input #1	N.O. Ground
	Input #2	N.O. Ground
Door sensor input		N.C. Ground
Tamper sensor		Optical
Operating temperature		-4°~122° F (-20°~50° C)
Keypad LED life		60,000 hours (over 6.8 years)
Weight		1-lb 2-oz (510g)
Dimensions		4¾"x3"x⅞" (120x76x22 mm)

Dimensions

SK-1323-SPQ:

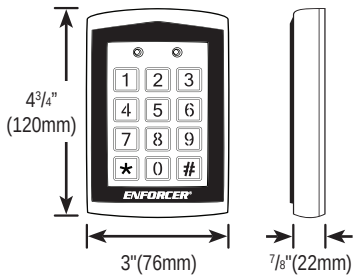

Outdoor Access Control Keypads

SK-1123-SPQ

SK-1123-SDQ

Model Numbers

SK-1123-SPQ NEW
Prox. Card Reader, 1,100 Users

SK-1123-SDQ NEW
1,100 Users

Accessories

PR-K1S1-A
Proximity Cards (EM125)
(Sold in packs of 10)

PR-K1K1-AQ
Proximity Keyfob (EM125)
(Sold in packs of 10)

Features

- Built-in proximity reader. 125kHz (EM125)*
- 12~24 VAC/VDC Auto-adjusting operation
- Up to 1,000 possible user codes (000~999) and/or proximity cards* programmable for output #1, 100 (001~100) for output #2
- Up to 50 (01~50) possible temporary visitor codes, which can be programmed for one-time or limited-time use (1~99 hours)
- Keypad illuminates when a button is pressed; backlight can be programmed for FULL, AUTO, or OFF in standby mode

*SK-1123-SPQ ONLY

- Output #1: Form C relay, 1A@30VDC max.
- Output #2: Form C relay, 1A@30VDC max.
- Outputs #1, #2 can be programmed to activate for up to 99,999 seconds (nearly 28 hours)
- Surface-mount back box included
- Duress code signals a silent alarm if an authorized user is forced to open the door under duress
- Egress input lets users exit the premises without keying in the code
- Interlocking input for connecting to a second keypad
- All features are programmed directly from the keypad: No need for an external programmer
- Tamper output: N.C. Dry contact, 50mA@24VDC max.
- IP66 Weatherproof Rating
- EEPROM Memory protects programmed information in case of power loss
- Up to 50 (01~50) duress codes for output #1, 10 (01~10) for output #2
- Door sensor input for anti-tailgating operation

Specifications

Model		SK-1123-SPQ	SK-1123-SDQ
Operating voltage		12~24 VAC/VDC	
Current draw (at 12VDC)	Standby	66mA	
	Total max current	160mA	
Outputs	#1 – Form C	1A@30VDC	
	#2 – Form C	1A@30VDC	
	Key Active	100mA@24VDC	
	Duress	100mA@24VDC	
	Interlock	100mA@24VDC	
	Tamper	50mA@24VDC	
Inputs	Egress	N.O. Ground	
	Door sensor	N.C. Ground	
	Door inhibit	N.O. Ground	
Proximity reader frequency		125kHz (EM125)	N/A
Proximity reader sensing distance		1 1/2" (38mm)	N/A
Operating temperature		-4°~158° F (-20°~70° C)	
Weight		1-lb 2-oz (520g)	
Dimensions (including back box)		4 15/16"x3 1/8"x2 1/16" (125x79x52 mm)	

Heavy-Duty Outdoor Keypad

Model Numbers

SK-3523-SDQ
Outdoor keypad

SK-3523-KEY
Extra keys for faceplate lock

Overview

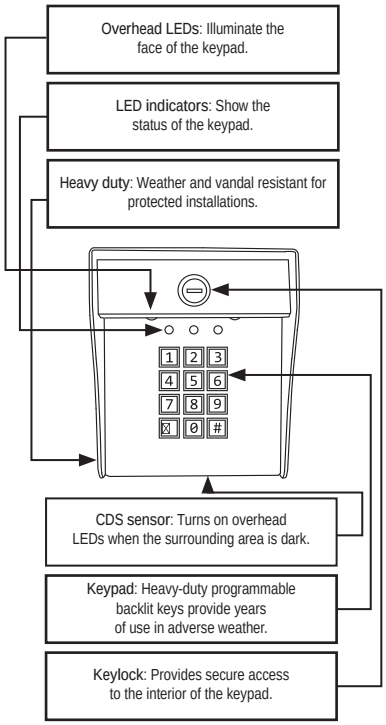

Features

- Rugged construction: Heavy-duty stainless-steel faceplate with a coated steel backing
- Up to 210 user codes
- Code flexibility: Codes can be four or five digits long
- Dual voltage: 12~24 VAC/VDC Operation
- Two Form C relays rated 12A@14VDC
- Door sensing input allows for anti-tailgating operation
- Overhead LEDs and programmable backlit keys for easy use in the dark
- Each relay output can be set from 1~99 seconds or toggle
- Wrong code lockout: After three wrong codes are entered, the keypad will go into lockdown for 55 seconds
- Tamper switch: N.C. dry contact, 3A@125/250 VAC
- Egress / push button input

Specifications

Model	SK-3523-SDQ
Operating voltage	12~24 VAC/VDC
Current draw	220mA@12VDC / 110mA@24VDC
Relay outputs (each output)	12A@14VDC / 7A@120VDC
Tamper switch	3A@125/250 VAC
Egress (P.B.) input	N.O. Ground
Reed input	N.C. Ground
Operating temperature	-4°~158° F (-20°~70° C)
Dimensions	6⁹⁄₁₆”x5¹⁄₁₆”x4³⁄₈” (167x128x112 mm)

Hinged Faceplate

Hinged faceplate allows for easy access

Programmable Timers

SA-027HQ
Annual timer

SA-027WQ
7-Day timer

SA-026Q
Mini timer

SA-025Q
Multi-purpose timer

For more information on programmable timers, please see page 22, 23, 101.

Outdoor Proximity Card Reader

Features

- 12VDC Operation, 200mA@12VDC
- Read range: 6" (15cm)
- Proximity frequency: 125kHz (EM125)
- Sealed and weatherproof (IP67)
- Tri-color wave-shaped LED status bar indicates proximity reader's mode and status:
  - Blue: On/Valid card indicator
  - Green: Programming mode
  - Red: Invalid card
- Output relay for either time (1 to 180 seconds) or toggle mode
- Egress input for easy exiting
- Buzzer for audible confirmation or silent mode (programmable)
- Up to 100 user cards can be programmed
- User cards easily deleted. Delete a single card, or all cards
- Up to 5 "Master" cards can be programmed
- 10 Cards included
- Dimensions: 3¾"x1¾"x1$^{1}/_{16}$" (95x44x17 mm)

Model Number

PR-112S-A
Up to 100 users, outdoor use

Accessories

PR-K1S1-A
Proximity Cards (EM125)
(Sold in packs of 10)

PR-K1K1-AQ
Proximity Keyfob (EM125)
(Sold in packs of 10)

Specifications

Power input	12VDC
Current draw	Standby: 80mA@12VDC Active: 200mA@12VDC
Max. read distance	6" (15cm)
User card limit	100 cards
Master card limit	5 cards
Transmit frequency	125kHz
Outputs	1 relay (NO/NC/COM)
Contact rating	1A@30V
Relay time delay	1~180 secs/ Toggle mode
Temperature	-4°~158° F (-20°~70° C)
Enclosure rating	IP67

Indoor Proximity Card Reader

Features

- 12VDC Operation, 80mA@12VDC
- Proximity frequency: 125kHz (EM125)
- Ten cards included
- Up to 500 users
- Up to five super-user cards and one master card
- Status LEDs for status and programming
- Auxiliary doorbell button rated 1A@24VDC
- Read distance of 6" (15cm)
- Tamper output rated 50mA@16VDC
- Selectable fail safe / fail secure via door lock jumper
- Output relay for timed (1~60 seconds) or toggle mode
- Dimensions 4¾"x2$^{3}/_{8}$"x1$^{5}/_{16}$" (120x60x23 mm)

Model Number

PR-312S-PQ
Up to 500 users, indoor use

Accessories

PR-K1S1-A
Proximity Cards (EM125)
(Sold in packs of 10)

PR-K1K1-AQ
Proximity Keyfob (EM125)
(Sold in packs of 10)

Overview

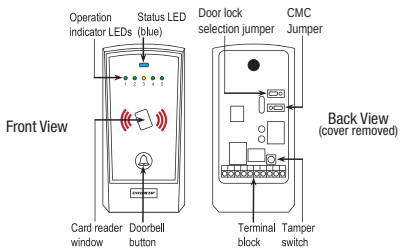

Fingerprint Reader Keypad

Model Number

SK-2611-SFSQ
Fingerprint Reader and Keypad

NEW

Specifications

User Capacity	1000
Fingerprint	500
PIN	500
Pin Length	4~6
Operating Voltage	12VDC
Current draw Idle	50mA
Current draw Active	100mA
Fingerprint Reader Type	Optical
Fingerprint Resolution	500DPI
Response time	<1S
Relay	One Form "C" (NO, NC, Common)
Output Time	1-99 Seconds (5 seconds default) or Toggle
Lock Output Load	2A
Alarm Output Load	5A
Environment	Indoor
Operating Temperature	-4°~122° (-20°C~50°C)

Features

- Stand-alone operation
- All programing done through the keypad
- Tri-color LED to provide status information
- One relay
- Timed (1-99 seconds) or Toggle mode output
- Verification Method: Fingerprint or PIN
- User capacity: 1,000 users (500 fingerprint user and 500 PIN users)
- PIN length:4~6 digits
- Access control interface for 3rd party electric lock, exit button, alarm, door bell
- Dimensions: $3^{1}/_{16}$"x$5^{15}/_{16}$"x$1^{1}/_{2}$" (78x150x37 mm)

Keypad Lock

Model Number

SK-7814-DDQ
Keypad Lock

NEW

Specifications

User Capacity	31
PIN	31
Master Code	1
Pin Length	3~11
Operating Voltage	6VDC (4xAA battery)
Current draw Idle	10μA
Current draw Active	180mA
Response time	<1S
Output Time	5 seconds or Toggle
Environment	Indoor
Battery life	1 year

Features

- Stand-alone operation
- All programing done through the keypad
- Dual-color LED to provide status information
- Non-Handed design can be used on left or right hand doors
- Emergency key to unlock the door or 9VDC battery terminals
- Passage mode setup
- Can be used on doors up to $2^{3}/_{8}$" thick
- Verification Method: PIN
- Master Code: 1
- User capacity: 31 users
- PIN length:3~11 digits
- Operating Voltage 6VDC (4xAA battery)
- Battery life 1 year

Wireless Video Door Phone

Features

- Talk with visitors and unlock doors or gates via the monitor
- Handheld monitor's rechargeable battery allows communication with visitors while moving around the premises
- Wide 3⅜" monitor screen for enhanced viewing
- Connect up to two additional monitors (sold separately)
- Includes a kickstand and charging base for the monitor
- Adjustable pan and tilt angle (20° from centerline)
- Camera is rated IP55 for outdoor use
- Egress input allows the door phone to be connected with a Request-to-Exit plate or other egress device
- Camera's built-in PIR sensor takes photos of approaching visitors
- Up to 100 images can be stored in memory
- Camera has built-in LEDs for nighttime operation
- Tamper switch triggers alarm if camera is removed from base
- Four programmable doorbell tones
- Wide (170°) field of view

Specifications

Monitor

Display		3⅜" (86mm) TFT
Operating voltage		5VDC (adapter) or 3.7VDC (battery)
Current draw	Active	250mA@4.2VDC
	Standby	5mA@4.2VDC
Battery life	Active	4.4 Hours
	Standby	220 Hours (9 days)
Operating frequency		2410.875~2471.625MHz
RF power		120mW
Wireless range		492' (150m)*
Dimensions		5"x3⅜"x⅞" (127x85x22 mm)
Weight		3.9-oz (110g)
Operating temperature		32°~104° F (0°~40° C)

*Range may vary greatly depending on the installation and operating environment.

Camera

Type		Color Camera
Chip		CMOS
Resolution		480 TV Lines
Lens		2mm
Field of view		170°
Operating voltage		9~16 VAC/5~16 VDC
Relock delay		1~6 s
Relay output		3A@250VAC/30VDC
Current draw	Active	250mA@4.2VDC
	Standby	3mA@4.2VDC
Battery life	Active	4.4 Hours
	Standby	366 Hours (15 days)
Dimensions (with bracket)		5¹¹⁄₁₆"x3⅛"x1¹⁵⁄₁₆" (144x80x50 mm) with bracket
Weight		4.3-oz (122g)
Operating temperature		14°~122° F (-10°~50° C)

Model Number

DP-236Q NEW
Camera and monitor set

Accessories

DP-236-MQ
Additional monitor

DP-236-SQ
Replacement monitor charger stand

DP-236-BQ
Replacement rechargeable lithium ion battery

Special Features

Unlocks Doors
Allows access remotely via the monitor

Wireless Operation
Range: Up to 492ft (150m)

1 Camera, 3 Monitors
Pair up to 3 monitors with 1 camera

Adjustable Viewing Angle
Larger variety of viewing angles

Overview

Camera

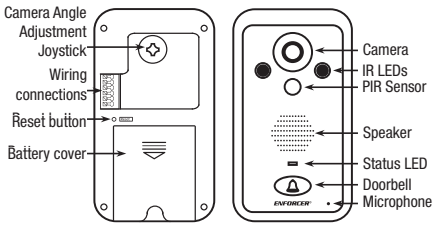

Monitor

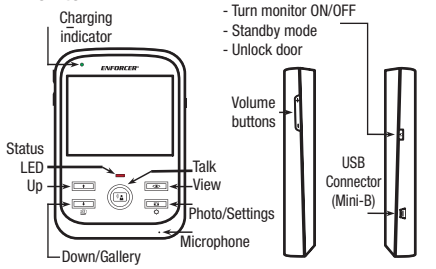

Wireless Audio Door Phone

Model Number

DP-A21Q
Wireless Audio Door Phone
(1 Channel)

NEW

Specifications

Frequency		900MHz
Range		650' (200m)
Operating Voltage	Handset	3.7V (Lithium Ion Battery)
	Outdoor Station	12VDC
Operating temperature		-4°~140°F (-20°~60°C)
Relay Output		2A@12VDC
Outdoor Station		IP54

Features

- Intercom between handsets with the press of a button
- Selectable audible, visible or vibrating alert to indicate someone at outdoor station or someone calling from another handset
- IP54 Weatherproof for outdoor use (outdoor station)
- Handset has attractive backlit LCD display
- Outdoor station has 1 Form C relay (NO/NC/COM, 2A@12VDC) output for unlocking doors, opening gate, etc.
- Unlimited number of handsets can work with up to two (1 channel) outdoor stations
- Handset is battery operated (3.7V lithium ion) with recharging station (included)
- Handset indicates outdoor temperature
- Handset has out-of-range indicator
- Handset has low-battery indicator
- Dimensions:
  - Handset: 5¾"x2"x$^{7}/_{8}$" (147x51x23 mm)
  - Outdoor Station: 5½"x2¼"x1¼" (140x58x45 mm)

Wireless Audio Door Phone

Model Number

DP-A22Q
Wireless Audio Door Phone
(2 Channel)

NEW

Specifications

Frequency		900MHz
Range		650' (200m)
Operating Voltage	Handset	3.7V (Lithium Ion Battery)
	Outdoor Station	12VDC
Operating temperature		-4°~140°F (-20°~60°C)
Relay Output		2A@12VDC
Outdoor Station		IP54

Features

- Handset has attractive backlit LCD display
- IP54 Weatherproof for outdoor use (outdoor station)
- Unlimited number of handsets can work with up to two (2 channel) outdoor stations
- Intercom between handsets with the press of a button
- Selectable audible, visible or vibrating alert to indicate someone at outdoor station or someone calling from another handset
- Outdoor station has 1 Form "C" relay (NO/NC/COM, 2A@12VDC) output.
- Handset is battery operated (3.7V lithium ion) with recharging station (included)
- Handset indicates outdoor temperature
- Handset has out-of-range indicator
- Handset has low-battery indicator
- Dimensions:
  - Handset: 5¾"x2"x7/8" (147x51x23 mm)
  - Outdoor Station: 5½"x2¼"x1¼" (140x58x45 mm)

Hands-Free Video Door Phone

Features

- Simple 2-wire connection
- Camera unit has built-in microphone and speaker for hands-free two-way communication
- Unlock doors with a single button press from the main monitor or secondary monitor (not included)
- Adjustable color tone, brightness, and contrast
- Adjustable speaker and ringer volume
- Camera has four LEDs for nighttime operation
- ¼" CMOS Sensor
- 700 TV Line resolution
- Large 7" screen
- Connect an additional monitor for up to two monitor stations (DP-234-MQ or DP-222-MQ – sold separately)

Model Number

DP-234Q
Camera and monitor set

Accessory

DP-234-MQ
Optional secondary hands-free monitor

Specifications

Camera	
CMOS	1/4" CMOS sensor
Resolution	700 TV lines
Lens	3.6mm
Relay output	1A@12VDC Max. dry contact
Current draw	180mA
Dimensions	2 3/16"x5 5/16"x1 9/16" (55x135x39 mm)

Monitor	
Display	7" Color TFT
Operating voltage	17VDC
Relock delay	3 seconds
Current draw	Active: 225mA Standby: 40mA
Dimensions	9 5/8"x6 5/16"x1 1/16" (245x160x18 mm)

Color Video Door Phone

Features

- Simple 2-wire connection
- Camera unit has built-in microphone and speaker for two-way communication
- Unlock doors with a single button press
- Adjustable color tone, brightness, and contrast
- Adjustable speaker and ringer volume
- Camera has six LEDs for nighttime operation
- ¼" CMOS Sensor
- 700 TV Line resolution
- Connect an additional monitor for up to two monitor stations (DP-234-MQ or DP-222-MQ – sold separately)

Model Number

DP-222Q
Camera and monitor set

Accessory

DP-222-MQ
Optional secondary handset monitor

Specifications

Camera	
CMOS	1/4" CMOS sensor
Resolution	700 TV lines
Lens	3.6mm
Relay output	1A@12VDC Max. Dry contact
Current draw	150mA
Dimensions	5 1/4"x3 9/16"x1 3/8" (130x90x33 mm)

Monitor	
Display	4" Color TFT
Operating voltage	17VDC
Current draw	Active 700mA, Standby 50mA
Dimensions	7 5/8"x8 1/2"x1 13/16" (194x260x46 mm)

Access Control Power Supplies

EAP-5D1Q

EAP-5D5Q

Model Numbers

EAP-5D1Q
One output, 5A@12VDC, 2.5A@24VDC

EAP-5D5Q
Five outputs, 5A@12VDC, 2.5A@24VDC

Accessories

EAP-5D1MQ
Power supply board used in EAP-5D1Q and EAP-5D5Q

PD-5PAQ
5-Output power distribution board used in EAP-5D5Q

Features

- AC Power failure supervision relay
- Battery failure/low battery supervision
- DC Power failure supervision (EAP-5D5Q)
- Auxiliary output relay
- Relays rated 3A@24VDC, 3A@120VAC
- Adjustable voltage range to compensate for voltage drop
- Built-in backup battery charger
- Selectable 2.2kΩ End-of-Line (EOL) resistor for AC failure and battery failure supervision relays via DIP switch
- LED Status indicator for AC input, DC output and channel outputs
- Selectable delay timer (5 seconds, 5 minutes, 5 hours) for AC failure supervision relay via DIP switch

Power:

- Field selectable for 12VDC or 24VDC
- Operating input voltage 110~240 VAC
- Adjustable voltage range (11~15 VDC, 23~28 VDC)
- Supply current: 5A@12VDC, 2.5A@24VDC
- AC Input fuse rating 3.15 A (glass fuse)
- DC Output overload sensing with red LED indicator and automatic shutdown during short circuit

Enclosure:

- Heavy-duty steel case
- Removable steel cover for easy access
- Enclosure has room for two 7AH batteries
- 6ft Power cord and battery leads included
- Dimensions: 12⅛"x12¼"x3⁹⁄₁₆"

Specifications

Input Voltage	110~240VAC
Output Voltage	12 or 24VDC selectable via DIP switch
Adjustable Output Voltage Range	11~15 @ 12VDC setting, via VR switch 23~28 @ 24VDC setting, via VR switch
No. of Outputs	EAP-5D1Q - 1, EAP-5D5Q - 5
Supply Current	5A@12VDC / 2.5A@24VDC
AC Input Fuse Rating	3.15A (glass fuse)
LED Status Indicator	AC input (Green), DC Output (Red)
End-of-Line Resistor (EOL)	Selectable ON (2.2KΩ) or OFF via DIP switch
AC-Fail Relay Delay Timer	Selectable @ 5sec, 5min or 5hr via DIP switch
Supervision Relays	Contact Rating: 3A@24VDC Dry Relay Output

Overview

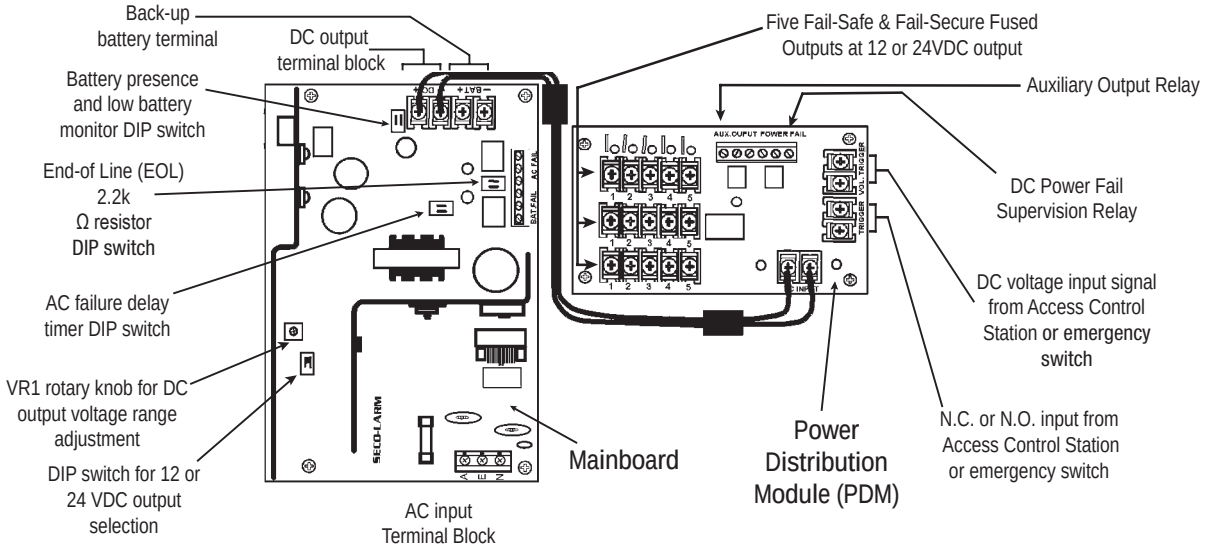

Rim-Type Exit Devices

SECURITY UL LISTED (SD-962AR-36A)

SD-962AR-36A SD-962AR-36M

Features

SD-962AR-36A Only:

- Fits doors from 30”~48” (76~122 cm)
- Works with standard external door handle/lock devices such as the ENFORCER Lever Trim (not included)
- Allen-type ¼-turn dogging lock allows the exit bar to be unlocked for extended periods of time
- Heavy-duty steel construction
- Compatible with SD-998C-NUQ Surface-Mount Electric Rim Strike

SD-962AR-36M Only:

- Modern flat rim type
- Fits doors from 36”~48” (91~122 cm)
- Works with rim cylinder locks (not included)
- Sturdy aluminum construction
- Compatible with SD-998C-NUQ Surface-Mount Electric Rim Strike

Model Numbers

SD-962AR-36A
For doors 30”~48” (76~122 cm) wide, UL listed

SD-962AR-36M*
Modern flat design, for doors 36”~48” (91~122 cm) wide

Accessories

SD-962HL-4A
Entry-type lever trim for SD-962AR-36A and SD-962AR-36G

Features

- Non-handed
- SC4, 6-pin lock
- Entry type
- Key locks and unlocks
- Two keys included

SD-998C-NUQ
See page 17 for more

Grade 1 Rim-Type Exit Device

SECURITY UL LISTED

Features

- Heavy-duty ANSI Grade 1 steel
- Allows exit from inside while locked from outside
- Reversible, non-handed design
- Separate deadlocking latch prevents the use of credit cards or similar means to open the latch bolt
- Allen-type ¼-turn dogging lock allows the exit bar to be unlocked for extended periods of time
- Includes all hardware for typical installation
- Works with standard external door handle/lock devices (not included)
- For metal or wood doors up to 1¾” thick (44.5mm)
- UL Listed
- Fits door from 33”~48” (84~122 cm)
- Compatible with SD-998C-NUQ Surface-Mount Electric Rim Strike

*Not UL listed

Model Number

SD-962AR-36G
For doors 33”~48” (84~122 cm), UL listed

Accessories

SD-962HL-4A
Entry-type lever trim for SD-962AR-36A and SD-962AR-36G

Features:

- Non-handed
- SC4, 6-pin lock
- Entry type
- Key locks and unlocks
- Two keys included

SD-962H-6LB
Escutcheon lever trim for SD-962AR-36G

Features:

- Non-handed
- Includes high-security lock with two keys
- Actuating shaft telescopes to the proper length to fit almost any door size

Surface-Type Door Closer w/ Back Check

Cover included

Model Number

SD-C101-SBBQ NEW
Up to 330-lb, ANSI size 1~6

Features

- Heavy-duty Grade 1 door closer for commercial use
- Adjustable sweep speed, latching speed, and back check
- Non-handed installation
- ANSI 156.4 certification 2 million life cycles
- Cast iron body & forged steel arm
- Concealing plastic cover
- Adjustable spring force
- Max. Door Opening Angle Hinge Side: 130˚
- Door width: 31½”~60” (800-1500 mm)
- Door weight: 145~330-lb (65-150 kg)

Surface-Type Door Closer w/ Back Check

Cover included

Model Number

SD-C101-SBAQ NEW
Up to 330-lb, ANSI size 1~6

Features

- Heavy-duty Grade 1 door closer for commercial use
- Adjustable sweep speed, latching speed, and back check
- Non-handed installation
- ANSI 156.4 certification 2 million life cycles
- Cast-aluminum body & forged steel arm
- Concealing plastic cover
- Adjustable spring force
- Max. Door Opening Angle Hinge Side: 130˚
- Door width: 31½”~60” (800-1500 mm)
- Door weight: 45~330-lb (20-150 kg)

Grade 1 Door Closer

Model Number

SD-C101-SGQ NEW
Up to 330-lb, ANSI size 1~6

Features

- Fits metal or wood doors up to 59” (150cm) wide
- Door weight up to 330-lb (150kg), adjustable for size 1~6
- Two independent valve adjustments for easy setting of sweep and latch speed
- Grade 1 door closer
- Reversible, non-handed design
- Anodized aluminum body
- Silver finish
- Forged steel arms
- Includes mounting hardware

Door Closers

SD-C121-S

SD-C131-SQ

Model Numbers

SD-C121-S
Up to 100-lb, ANSI size 2

SD-C131-SQ
Up to 140-lb, ANSI size 3

Features

- Reversible, non-handed design
- Two independent valve adjustments for easy setting of sweep and latch speed
- Anodized aluminum body
- Silver finish
- Forged steel arms
- Includes mounting hardware

SD-C121-S Only:

- Fits metal or wood doors up to 42” (107cm) wide
- Door weight up to 100-lb (45kg), ANSI size 2

SD-C131-SQ Only:

- Fits metal or wood doors up to 36” (91cm) wide
- Door weight up to 140-lb (65kg), ANSI size 3

Request-to-Exit Plates

SD-7202GC-PEQ

Illuminated | SPDT

- 2" Square illuminated pushbutton
- Includes interchangeable messages in English, Spanish, and French
- Single-gang, stainless-steel faceplate
- NO/NC Contacts rated 10A@125VAC

SD-7103GC-PEQ

Illuminated | DPST

- Illuminated green pushbutton
- Includes interchangeable messages in English, Spanish, and French
- Slimline, stainless-steel faceplate
- NO/NC Contacts rated 5A@250VAC

SD-7202GC-PTQ

Illuminated | Timer | SPDT

Similar to SD-7202GC-PEQ but with:

- Built-in timer: 1~180 seconds
- Buzzer output for audible status

SD-7103GC-PTQ

Illuminated | Timer | SPDT

Similar to SD-7103GC-PEQ but with:

- Built-in timer: 1~180 seconds
- Buzzer output for audible status

SD-7223GW-LQ

Illuminated | SPDT

- 2" Square illuminated pushbutton
- Includes interchangeable messages in English, Spanish, and French
- Single-gang, white plastic faceplate
- NO/NC Contacts rated 10A@125VAC

SD-7217GWQ

DPST

- No message screen printed on plate
- Green 1½" pushbutton
- Single-gang white-plastic faceplate
- NO/NC Contact rated 5A@125VAC

SD-7201GCPE1Q — DPST
SD-7201GFPE1Q — DPDT

- "EXIT" and "SALIDA"
- Green 1½" pushbutton
- Single-gang, stainless-steel faceplate
- NO/NC Contact rated 5A@125VAC

SD-7201GC-PEQ

DPST

- "PUSH TO EXIT"
- Green 1½" pushbutton
- Single-gang, stainless-steel faceplate
- NO/NC Contact rated 5A@125VAC

SD-7201RCPE1Q

DPST

- "EXIT" and "SALIDA"
- Red 1½" pushbutton
- Single-gang, stainless-steel faceplate
- NO/NC Contact rated 5A@125VAC

SD-7201GAPT1Q

Timer | SPDT

Similar to SD-7201GCPE1Q but with:

- Built-in timer: 1~180 seconds
- Buzzer output for audible status
- NO/NC Contact rated 3A@24VDC

Request-to-Exit Plates

SD-7213-GSP

Pneumatic Timer | DPST

- Single-gang, stainless-steel faceplate
- Green mushroom pushbutton
- Built-in pneumatic timer requires no external power
- NO/NC Contacts rated 5A@125VAC
- Timer adjustable from 1~60 seconds

SD-7213-RSP

Pneumatic Timer | DPST

- Single-gang, stainless-steel faceplate
- Red mushroom pushbutton
- Built-in pneumatic timer requires no external power
- NO/NC Contacts rated 5A@125VAC
- Timer adjustable from 1~60 seconds

SD-7623-GSTQ

NEW

Illuminated | Timer | LED

- Single-gang, stainless-steel faceplate
- Built-in dual-colored status LED
- Field-programmable color, red or green
- Built-in timer, 1~180 seconds
- 12/24 VDC Operation
- NO/NC Contacts rated 3A@24VDC

SD-7217-GSBQ

NEW

Buzzer | LED | SPDT

- Single-gang, stainless-steel faceplate
- Built-in buzzer with adjustable sound level
- Built-in LED for visible status
- 12/24 VDC Operation
- NO/NC Contacts rated 10A@125VAC

SD-7286-GWQ

DPDT

- Large green 2" diameter pushbutton
- Flush mount, protrudes only 9/16" (15mm)
- Aluminum back plate fits to single-gang box
- ABS plastic front cover snaps to back plate
- DPDT Momentary switch, 5A@125VAC contact rating

SD-8201GTPE1Q

Wireless | SPDT

- Single-gang, stainless-steel faceplate
- For hard-to-wire installations
- Green 1½" pushbutton
- Built-in RF transmitter (similar to SK-919TD1S-UP; see page 76-78 for compatible receivers)

SD-8202GT-PEQ

Wireless | Illuminated | SPDT

- Single-gang, stainless-steel faceplate
- For hard-to-wire installations
- 2" Square illuminated pushbutton
- Built-in RF transmitter (similar to SK-919TD1S-UP; see page 76-78 for compatible receivers)

SD-8103GT-PEQ

Wireless | Illuminated | DPST

- For hard-to-wire installations
- Illuminated pushbutton
- Built-in RF transmitter (similar to SK-919TD1S-UP; see page 76-78 for compatible receivers)
- Slimline, stainless-steel faceplate

Request-to-Exit Plates

SD-6276-SS1Q

Illuminated | Timer | SPDT

- Single-gang, stainless-steel faceplate
- Piezoelectric buttons for indoor or outdoor use
- Dual color LED ring shows status
- Timer adjustable 1~30 seconds or toggle
- Dual NO/NC contacts rated 2A@30VDC

SD-6176-SS1Q

Illuminated | Timer | SPDT

- Slimline, stainless-steel faceplate
- Piezoelectric buttons for indoor or outdoor use
- Dual color LED ring shows status
- Timer adjustable 1~30 seconds or toggle
- Dual NO/NC contacts rated 2A@30VDC

SD-6276-SSVQ

Illuminated | Timer | Override

- Single-gang, stainless-steel faceplate
- Piezoelectric buttons for indoor or outdoor use
- Dual color LED ring shows status
- Timer adjustable 1~30 seconds or toggle
- Dual NO/NC contacts rated 2A@30VDC
- Built-in manual override button

SD-6176-SSVQ

Illuminated | Timer | Override

- Slimline, stainless-steel faceplate
- Piezoelectric buttons for indoor or outdoor use
- Dual color LED ring shows status
- Timer adjustable 1~30 seconds or toggle
- Dual NO/NC contacts rated 2A@30VDC
- Built-in manual override button

SD-7201KBQ *Single-gang*
SD-7101KBPE1Q *Slimline*

SPST

- Black pushbutton
- Stainless-steel, ring guard
- N.C. Contact rated 1A@125VAC

SD-7101RAEX1Q

SPST

- Red pushbutton
- Stainless-steel, ring guard
- N.O. Contact rated 1A@125VAC

SD-7204SGEX1Q *Single-gang*
SD-7104SGEX1Q *Slimline*

Vandal | DPST

- Vandal-resistant, 1" diameter, stainless-steel pushbutton
- NO/NC Contact rated 5A@250VAC
- "EXIT" and "SALIDA" silk-screened on plate

SD-7275SGEX1Q *Single-gang*
SD-7175SGEX1Q *Slimline*

Vandal | Illuminated | DPST

- 1" diameter, illuminated 2-color, momentary pushbutton
- NO/NC Contact rated 5A@250VAC
- "EXIT" and "SALIDA" silk-screened on plate

Miniature Push Buttons/RTE Plates

SD-5SMG01 NEW

- Large green metal mushroom button
- Surface-mount with backbox
- N.O. Push-to-close
- $2^{1}/_{16}$"$2^{1}/_{16}$"1" (53x53x25 mm)

SD-5SFS06 NEW

- Large flush-mount metal button
- Surface-mount with backbox
- SPDT switch (NO/NC/COM)
- $2^{1}/_{16}$"$2^{1}/_{16}$"1" (53x53x25 mm)

SD-5RMR03 NEW

- Large red metal mushroom button
- Surface-mount with backbox
- N.O. Push-to-close
- $3^{1}/_{8}$"$1^{3}/_{16}$"$^{15}/_{16}$" (80x30x24 mm)

SD-5RFS04 NEW

- Small flush-mount metal button
- Surface-mount with backbox
- SPDT switch (NO/NC/COM)
- $3^{1}/_{8}$"$1^{3}/_{16}$"$^{15}/_{16}$" (80x30x24 mm)

SD-5RMG02 NEW

- Large green metal mushroom button
- Mini RTE plate
- Flush-mount
- N.O. Push-to-close
- $4^{1}/_{2}$"$1^{1}/_{2}$"1" (115x40x25 mm)

SD-5RFS05 NEW

- Small flush-mount metal button
- Surface-mount with backbox
- SPDT switch (NO/NC/COM)
- $3^{1}/_{8}$"$1^{3}/_{16}$"$^{15}/_{16}$" (80x30x24 mm)
- Illuminated button

Rocker Switches

SD-5STW10 NEW

- Rocker switch
- Surface-mount with backbox
- SPDT switch (NO/NC/COM)
- $2^{11}/_{16}$"$2^{11}/_{16}$"$1^{1}/_{16}$" (69x69x27 mm)

SD-5STW07 NEW

- Rocker switch
- Surface-mount with backbox
- SPDT switch (NO/NC/COM)
- $3^{3}/_{8}$"$3^{3}/_{8}$"1" (86x86x25 mm)

SD-5STW08 NEW

- Rocker switch
- Flush-mount
- SPDT switch (NO/NC/COM)
- $3^{3}/_{8}$"$3^{3}/_{8}$"$^{3}/_{4}$" (86x86x20 mm)

SD-5RTW09 NEW

- Rocker switch
- Surface-mount
- SPDT switch (NO/NC/COM)
- $3^{3}/_{8}$"$1^{3}/_{4}$"$^{1}/_{2}$" (86x43x13 mm)

Post-Mount No-Touch Sensor

Features

- Adjustable sensor range up to 7" (18cm)
- Weather resistant for outdoor use (IP65)
- Stainless steel faceplate
- Hinged faceplate easily removes from box for easy wiring
- 1A Relay, adjustable trigger duration 0.8~30 seconds or toggle
- Gooseneck or wall-mountable
- Manual override button
- LED-Illuminated sensor area for easy identification
- Selectable LED colors (turns from red to green or green to red) on sensor activation
- Includes heavy-duty steel box

Model Number

SD-9963-KSGQ
Post-mount, no-touch sensor with manual override

Specifications

Power		12/24 VDC
Current drain (max.)	Standby	16mA@12VDC / 25mA@24VDC
	Triggered	25mA@12VDC / 32mA@24VDC
Relay type		Form C dry contact, 1A@30VDC
Response time		10ms
LEDs	Standby	Red (selectable)
	Triggered	Green (selectable)
Output time		0.8~30 s or toggle
IP Rating		IP65
Temperature range		-4°~131° F (-20°~55° C)
Size		4"x5½"x3" (102x134x77 mm)

RTE Plate w/ Delayed Egress Timer

Features

- Door unlocks and stays unlocked until the system is re-energized using the included keys and keyswitch
- Programmable nuisance delay timer (0~3 seconds) to prevent accidental door unlocking
- Adjustable pre-delay timer (1~30 seconds) before the door unlocks
- Form C relay outputs for lock relay and remote alarm relay (3A@30VDC)
- Fits standard double-gang backbox
- Keyswitch to re-energize door lock

Model Number

SD-7428-GSEQ
Request-to-Exit Button with Delayed Egress Timer

Specifications

Operating voltage		12~24 VDC
Current draw	Standby	60mA@12VDC, 90mA@24VDC
	Release delay	150mA@12VDC, 55mA@24VDC
	Lock relay output	10mA@12VDC, 15mA@24VDC
Lock control output		3A@30VDC, Form C, NO/NC/COM
Remote alarm output		3A@30VDC, Form C, NO/NC/COM
Buzzer sound level		12VDC: 95db@1m, 24VDC:100db@1m

Microwave Motion Sensor

Features

- Microwave technology, 24.125GHz
- Sensing Range 10' (3m)
- Weatherproof for outdoor use (IP54)
- Adjustable sensing angle
- Black ABS housing

Model Number

NEW

SD-R400-BQ
Microwave Motion Sensor, Sensing Range 10' (3m)

Specifications

Sensing Type	Microwave
Sensing Frequency	24.125GHz
Sensing range	10' (3m)
Operating Voltage	12~27 VAC/VDC
Relay Type	Form "A" (N.O./Common)
IP Rating	IP54
Temperature Range	-4°~122°F (-20°~50°C)

Indoor No-Touch Sensors

SD-927PKC-NEQ

SD-927PKC-NSQ

SD-927PKC-NFQ

SD-927PWCQ

Features

- No-touch – just wave a hand in front of the sensor
- Sensing range up to 4" (10cm); sensing range up to 2" (5cm) for SD-927PWCQ
- Selectable LED color: Green to red or red to green
- SPDT relay output, 3A@24VDC
- Clean and simple no-touch operation reduces the risk of cross-contamination
- Reliable motion-sensing IR technology
- Durable, stainless steel, single-gang faceplate (except for SD-927PWCQ)
- Triggers a minimum of 0.5 sec, or as long as hand is near the sensor
- 12VDC Operation
- Current draw: 40mA@12VDC
- Dimensions: $2^{3}/_{4}$"x$4^{1}/_{2}$"x$1^{5}/_{16}$" (70x115x33.5 mm)

Model Numbers

SD-927PKC-NEQ
Single-gang, stainless-steel faceplate, English message

SD-927PKC-NSQ
Single-gang, stainless-steel faceplate, Spanish message

SD-927PKC-NFQ
Single-gang, stainless-steel faceplate, French message

SD-927PWCQ
Single-gang, white plastic faceplate, English, French, and Spanish messages

Specifications

Model		SD-927PKC-NxQ	SD-927PWCQ
Operating voltage		12VDC	
Current draw		40mA@12VDC	
Relay type		Form C NO/NC/COM	
Switching capacity		3A@24VDC	
Response time		10mS	
LEDs	Standby	Green (selectable)	Red (selectable)
	Triggered	Red (selectable)	Green (selectable)
Output time		0.5sec or as long as sensor is triggered	
Range		4" (10cm)	2" (5cm)
Operating temp.		-4°~131° F (-20°~55° C)	
Weight		3.0-oz. (85g)	2.5-oz. (70g)

Outdoor No-Touch Sensors

SD-9263-KSQ

SD-9163-KSQ

SD-9263-KSVQ

SD-9163-KSVQ

Features

- Weatherproof (IP65) construction for outdoor use
- Clean and simple no-touch operation reduces the risk of cross-contamination
- Adjustable sensor range up to 7" (18cm)
- SPDT Relay output, 1A@30VDC
- Adjustable trigger duration 0.5~20 seconds or toggle
- Selectable LED color: Green to red or red to green
- 12/24 VDC Operation
- Current draw: 25mA@12VDC, 32mA@24VDC

SD-9263-KSVQ and SD-9163-KSVQ only:

- Manual override button function in case of power failure

SD-9263-KS1Q and SD-9163-KS1Q only:

- Spanish versions

Model Numbers

SD-9263-KSQ
Single-gang, no-touch sensor

SD-9163-KSQ
Slimline, no-touch sensor

SD-9263-KSVQ
Single-gang, no-touch sensor with mechanical override

SD-9163-KSVQ
Slimline, no-touch sensor with mechanical override

SD-9263-KS1Q
Single-gang, no-touch sensor, Spanish message

SD-9163-KS1Q
Slimline, no-touch sensor, Spanish message

French versions also available
Contact SECO-LARM for Details

Request-to-Exit Key Switch Plates

SD-72051-V0, SD-72002-V0

SD-71051-V0, SD-71002-V0

Features

SD-72051-V0 and SD-71051-V0:

- N.C. Turn-to-Open
- Stainless-steel plate
- Includes shunt ON, momentary OFF spring loaded keylock switch
- Switch is maintained ON, springs back from OFF
- Key is removable from the ON position
- Replacement key available (SS-090KN-0)

SD-72002-V0 and SD-71002-V0:

- N.C.Turn-to-Open
- Stainless-steel plate
- Includes maintained ON/OFF keylock switch
- Switch can be left ON or OFF
- Key is removable from the ON or OFF position
- Replacement key available (SS-090KN-0)

Model Numbers

SD-72051-V0
Single-gang, momentary

SD-72002-V0
Single-gang, shunt

SD-71051-V0
Slimline, momentary

SD-71002-V0
Slimline, shunt

Application

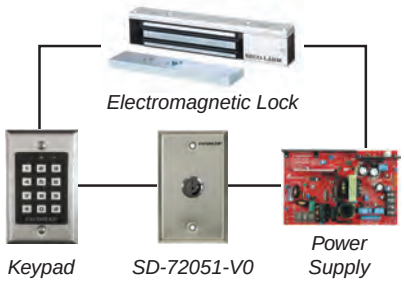

Keylock Switch Type

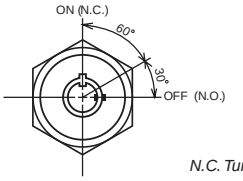

N.C. Turn-to-Open

Mortise Cylinder Key Switch

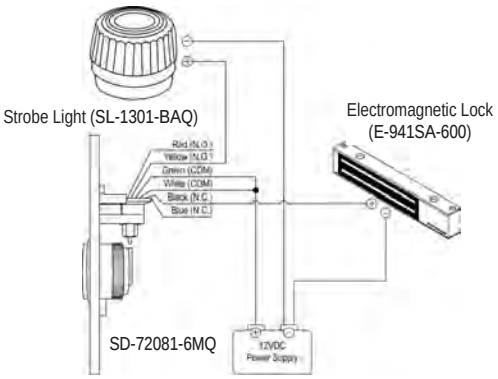

Features

- Acts as a backup for access control systems so that the system does not rely on the integrity of a single device
- For electric lock control or alarm panels
- Keyed mortise cylinder (2 keys included)
- Mortise cylinder removable for ease of keying
- Flush-mount with vandal-resistant screws
- Back plate fits to single-gang box
- Stainless steel front cover conceals screws
- DPDT Momentary switch rated 5A@125VAC
- Color-coded wires

Model Number

SD-72081-6MQ
Single-gang, mortise switch

Specifications

Switch Type	DPDT Switch (momentary)
Contact Rating	5A@125VAC, NO/NC
Dimensions	$2^{3}/_{4}$"x$4^{1}/_{2}$"x$1^{7}/_{16}$" (69x114x37 mm)

Dimensions

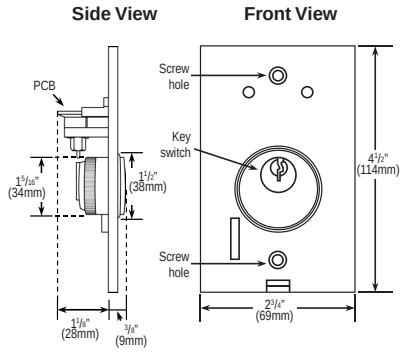

Tubular Key Lock Switches

SS-090

SS-090 *Shunt ON/OFF, two terminals, SPST*

- Maintained ON/OFF, key removable from both ON and OFF positions
- Commonly used as an ON/OFF switch to arm/disarm alarm or shunt zone
- Rated 2A@12VDC
- N.O. Turn to close
- Replacement keys available (see chart)

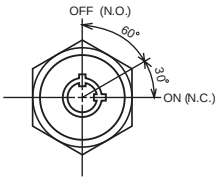

SS-090-1H0

SS-090-1H0 *Shunt ON/OFF, two terminals, SPST*

- Maintained ON/OFF, key removable from OFF position only
- Commonly used in situations that require return of key to ensure that device is OFF
- N.O. Turn to close
- Replacement key available (SS-090-1H0)

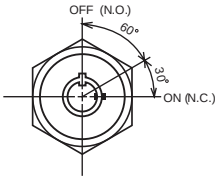

SS-095

SS-095 *Momentary ON, shunt OFF, two terminals, SPST*

- Maintained OFF, springs back from ON; key removable from ON position only
- Commonly used for momentary arm/disarm alarm inputs or other applications requiring high-security momentary ON
- N.O. Turn to close
- Replacement keys available (see chart)

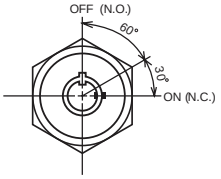

Spare / Replacement Keys

SS-090KN

- Replacement keys for tubular key lock switches
- Eleven different key numbers available (1300-1310)
- See the chart below for which key numbers are available for each key lock and the correct key lock part numbers for ordering

Keylock Model Number Chart

Key #	SS-090	SS-095	SS-090-1H0	SS-090KN
1300	SS-090-2H0	SS-095-1H0	SS-090-1H0	SS-090KN-0
1301	SS-090-2H1	SS-095-1H1	N/A	SS-090KN-1
1302	SS-090-2H2	SS-095-1H2	N/A	SS-090KN-2
1303	SS-090-2H3	SS-095-1H3	N/A	SS-090KN-3
1304	SS-090-2H4	SS-095-1H4	N/A	SS-090KN-4
1305	SS-090-2H5	SS-095-1H5	N/A	SS-090KN-5
1306	SS-090-2H6	SS-095-1H6	N/A	SS-090KN-6
1307	SS-090-2H7	SS-095-1H7	N/A	SS-090KN-7
1308	SS-090-2H8	SS-095-1H8	N/A	SS-090KN-8
1309	SS-090-2H9	SS-095-1H9	N/A	SS-090KN-9
1310	SS-090-2HX	SS-095-1HX	N/A	SS-090KN-0

Accessories

SS-199Q
Stainless-steel slimline plate with ¾" "D" hole

SS-299Q
Stainless-steel single-gang plate with ¾" "D" hole

HD 3in1 Hybrid Fixed Rollerball Camera

HD
DNR
1080p Resolution

Features

- HD-TVI/CVI/AHD
- 1200 TV Lines, 1080p Resolution
- 1/2.9" Sony Super HAD II CCD
- 2.8mm lens
- 36 IR LEDs, Up to 50ft IR range
- H.264 Support
- Heavy-duty vandal-resistant design
- Cables concealed in bracket to prevent tampering
- Rugged, weatherproof (IP65) construction
- Split-glass design to eliminate IR reflection
- ICR Module
- 12VDC Operation

Model Number

NEW

EV-Y2203-A2WQ
2.8mm lens, 1080p

Specifications

Format	TVI/CVI/AHD
Lens	2.8mm ICR
Viewing angle	90°
Megapixels	2.12MP
Minimum Lux (IR Off)	Color 0.1Lux/F1.4, B/W 0.01Lux/F1.4
Voltage	12VDC
CMOS size	1/2.9 inch
3DNR	Yes
DWDR	Yes
Onboard OSD control	Yes
# of IR LEDs	36xΦ5
IR LED range	Up to 50ft (15m)
Gamma correction	0-1
Gain control	Yes
Dimensions	$2^{15}/_{16}$"x$3^{11}/_{16}$"(75x93 mm)
Weight	0.8-lb

HD 3in1 Hybrid Varifocal Rollerball Camera

HD
DNR
1080p Resolution

Features

- HD-TVI/CVI/AHD
- 1200 TV Lines, 1080p Resolution
- 1/2.9" Sony Super HAD II CCD
- 2.8~12mm Varifocal lens
- 36 IR LEDs, Up to 100ft IR range
- H.264 Support
- Heavy-duty vandal-resistant design
- Cables concealed in bracket to prevent tampering
- Rugged, weatherproof (IP65) construction
- Split-glass design to eliminate IR reflection
- ICR Module
- 12VDC/24VAC Operation

Model Number

NEW

EV-Y2203-AMWQ
2.8~12mm Varifocal lens, 1080p

Specifications

Format	TVI/CVI/AHD
Lens	2.8-12mm ICR
Viewing angle	30°-90°
Megapixels	2.12MP
Minimum Lux (IR Off)	Color 0.1Lux/F1.4, B/W 0.01Lux/F1.4
Voltage	12VDC
CMOS size	1/2.9 inch
3DNR	Yes
DWDR	Yes
Onboard OSD control	Yes
# of IR LEDs	36 X Φ5
IR LED range	Up to 100ft (30m)
Gamma correction	0-1
Gain control	Yes
Dimensions	$4^{3}/_{4}$"x$3^{3}/_{4}$" (120x95 mm)
Weight	1.6-lb

HD 3in1 Hybrid Fixed Bullet Camera

HD
DNR
1080p Resolution

Model Number

NEW

EV-Y1203-A2WQ
2.8mm lens, 1080p

Specifications

Format	TVI/CVI/AHD
Lens	2.8mm ICR
Viewing Angle	90°
Megapixels	2.12MP
Minimum Lux (IR Off)	Color 0.1Lux/F1.4, B/W 0,01Lux/F1.4
Voltage	12VDC
CMOS Size	1/2.9 inch
3DNR	Yes
DWDR	Yes
Onboard OSD Control	Yes
# of IR LEDs	1 X IR III
IR LED Range	Up to 66ft (20m)
Gamma Correction	0-1
Gain Control	Yes
Dimensions	$2^{5}/_{8}$"x$2^{5}/_{8}$"x$6^{9}/_{16}$" (66x66x166 mm)
Weight	0.8lbs

Features

- HD-TVI/CVI/AHD
- 1200 TV Lines, 1080p Resolution
- ½.9" Sony 2.12 Megapixel CMOS
- 2.8mm Lens
- Rugged, weatherproof (IP65) construction
- Single Array IR LEDs (equivalent to 24 LEDs), Up to 66ft (20m) IR range
- 12VDC Operation
- Cables concealed in bracket to prevent tampering

HD 3in1 Hybrid Varifocal Bullet Camera

HD
DNR
1080p Resolution

Model Number

NEW

EV-Y1203-AMWQ
2.8~12mm Varifocal lens, 1080p

Specifications

Format	TVI/CVI/AHD
Lens	2.8-12MM ICR
Viewing angle	30°-90°
Megapixels	2.12MP
Minimum Lux (IR Off)	Color 0.1Lux/F1.4, B/W 0,01Lux/F1.4
Voltage	12VDC/24VAC
CMOS size	1/2.9 inch
3DNR	Yes
DWDR	Yes
Onboard OSD control	Yes
# of IR LEDs	3 X IR III
IR LED range	Up to 160ft (50m)
Gamma correction	0-1
Gain control	Yes
Dimensions	$3^{11}/_{16}$"x$3^{3}/_{4}$"x$10^{3}/_{8}$" (93x96x263 mm)
Weight	1.7-lb

Features

- HD-TVI/CVI/AHD
- 1200 TV Lines, 1080p Resolution
- ½.9" Sony 2.12 Megapixel CMOS
- 2.8~12mm Varifocal lens
- Rugged, weatherproof (IP65) construction
- Triple Array IR LEDs (equivalent to 48 LEDs), Up to 160ft (50m) IR range
- 12VDC/24VAC Operation
- Cables concealed in bracket to prevent tampering

HD 3in1 Hybrid Varifocal Dome Camera

HD
DNR
1080p Resolution

Features

- HD-TVI/CVI/AHD
- 2.8~12mm 3M ICR Lens
- ½.9" Sony 2.12 Megapixel CMOS
- 1080p Resolution, 1200 TV Lines
- Rugged, weatherproof (IP66) design
- Rugged, vandal-resistant design with no exposed screws and concealed cable
- 36 IR LEDs Up to 50ft (15m) range
- 30FPS
- 12VDC/24VAC Operation

Model Number

NEW

EV-Y2203-AMWAQ
2.8~12mm lens, 1080p

Specifications

Format	TVI/CVI/AHD
Viewing angle	30°-90°
Megapixels	2.12MP
Minimum Lux (IR Off)	Color 0.1Lux/F1.4, B/W 0,01Lux/F1.4
3DNR, DWDR	Yes
Onboard OSD control	Yes
# of IR LEDs	36 X Φ5
IR LED range	Up to 50ft (15m)
Dimensions	$4^{3}/_{4}$"x$3^{3}/_{8}$" (120x85x28 mm)

HD-AHD UFO Camera

HD
DNR
1080p Resolution

Features

- HD-AHD Technology
- 1200 TV Lines, 1080p resolution
- ½.9" Sony 2.12 Megapixel CMOS
- Low-profile design, extends outward only one inch
- Day/Night operation captures images even in low light
- 3.7mm Pinhole lens
- Heavy-duty, vandal-resistant design
- Lens rotates to nearly any angle for flexible installation
- DWDR (Digital Wide Dynamic Range) for clear images in strong backlight
- 12VDC Operation

Model Number

NEW

EV-H6206-A3WQ
3.7mm Pinhole lens, 1080p

Specifications

Format	AHD
Lens	3.7mm
Megapixels	2.12MP
Minimum Lux (IR Off)	0.1
3DNR, DWDR	Yes/Yes
Onboard OSD Control	Yes
Dimensions	3"x1$^{12}/_{16}$" (77x49 mm)

HD-AHD Corner-Mount Camera

HD
DNR
1080p Resolution

Features

- 1080p resolution
- ½.9" 2.43 Megapixel CMOS
- 12VDC/24VAC Operation
- IP Rating: IP66
- Rugged, weatherproof (IP66) design
- Designed to easily fit corners in office buildings, elevators, and more

Model Number

NEW

EV-H4203-A3SQ
3.7mm lens, 1080p

Specifications

Format	AHD
Viewing angle	120°
Megapixels	2.43MP
Minimum Lux (IR Off)	0.1
3DNR, DWDR	Yes/Yes
Onboard OSD control	Yes
# of IR LEDs	30 (940mm)
IR LED range	Up to 33ft (10m)
Dimensions	7½"x5½"x1$^{11}/_{16}$" (190x140x75 mm)

HD Hybrid DVRs (HD+IP)

Model Numbers

DRH-104Q NEW
4 Channels

DRH-108Q NEW
8 Channels

DRH-116Q NEW
16 Channels

Available on the App Store

ANDROID APP ON Google play

HD ENFORCER IP HD ONVIF

Features

- Connects to HD cameras + 4, 8, 16-CH
- High-resolution recording and playback over coaxial cable - up to 1920x1080
- H.264 Compression
- VGA and HDMI output
- Free CMS software and free P2P service
- Remote monitoring via Browser or Mobile app
- Programmable features such as motion detection, event, and more
- Easy and convenient firmware upgrade via USB
- Available without HDD, or with 1 TB, 2TB, 4TB HDD

Features

Model			DRH-104Q	DRH-108Q	DRH-116Q
Video	Inputs		4 BNC	8 BNC	16 BNC
	HD Format		HD-AHD, HD-TVI, HD-CVI		
	Outputs	Main monitor	VGA/HDMI Sync output		
	VGA output (optional)		1920x1080, 1440x900, 1280x1024, 1366x768, 1024x768, 800x600		
Audio	Outputs	Main audio	1Ch, BNC		
		Call audio	Bidirected-talk, BNC port		
	Audio compression		G.711A		
Recording & Storage	Compression method		H.264		
	Recording modes		Continuous, scheduled, alarm, motion detection, pre-alarm		
	Video output		4 Ch 1080p@120	8 Ch 1080p@240	16 Ch 1080p@480
	Recording bit rate		16-8000Kbps VBR, CBR		
	Snapshot		BMP		
	Built-in storage interface		2xSATA (4TB max)		
	Export		USB 2.0 port – Supports flash drive, or DVD/RW drive or external USB HDD		
Alarm	Alarm input		x4 via, D-Sub (TTL)		
	Alarm relay output		x1, D-Sub, 1.0A@30VDC or 1.0A@120VAC		
	Alarm detection		NO/NC, Programmable		
	Video loss detection		Programmable		
Connectivity	Network connectivity		RJ-45, 10/100Mbps Ethernet, static IP, DHCP, PPPoE, DDNS		
	Remote operation		Monitoring, playback, recording, system setup, dome camera control, archiving		
	Mobile viewing		IPad/iPhone®, Android™		
	IR Remote		Yes		
	Dome camera control protocol		Pelco P, Pelco D, AD422, Fastrax 2, Panasonic, GE, DSCP, JVC		
	USB		2xUSB 2.0 (Exporting, USB mouse)		
Other	Dimensions		$17^{5}/_{16}$"x$2^{11}/_{16}$"x$14^{1}/_{16}$" (440x68.5x357 mm)		
	Power adapter		AC 100~240V, 50~60Hz, 60W adapter (included)		

IP Fixed Rollerball Camera

IP
PoE
ONVIF
1080p Resolution

Model Number

NEW

EV-N2206-2W4Q
1/2.9" Sony 2.43 Megapixel CMOS, 1080p

Specifications

Format	IP
Lens	2.8mm ICR
Viewing angle	90°
Megapixels	2.43MP
Minimum Lux (IR Off)	Color 0.2Lux/F1.4, B/W 0.05Lux/F1.4
Voltage	12VDC/PoE
CMOS size	1/2.9 inch
3DNR	Yes
DWDR	Yes
Onboard OSD control	Yes
# of IR LEDs	36 X Φ5
IR LED range	Up to 100ft (30m)
Gamma correction	1.6-2.2
Gain control	Yes
Dimensions	$2^{15}/_{16}$"x$3^{11}/_{16}$" (75x93 mm)
Weight	0.8-lb

Features

- 1080p Resolution
- 1/2.9" Sony 2.43 Megapixel CMOS
- 2.8mm Lens
- 36 IR LEDs, up to 100ft IR range
- H.264 Support
- Cables concealed in bracket to prevent tampering
- Heavy-duty vandal-resistant design
- Rugged, weatherproof (IP65) construction
- Split-glass design to eliminate IR reflection
- ICR Module
- 12VDC and PoE 802.3af Operation
- ONVIF Profile S

IP Varifocal Rollerball Camera

IP
PoE
ONVIF
1080p Resolution

Model Number

NEW

EV-N2206-MW4Q
1/2.9" Sony 2.43 Megapixel CMOS, 1080p

Specifications

Format	IP
Lens	2.8~12mm ICR
Viewing Angle	30°-90°
Megapixels	2.43MP
Minimum Lux (IR Off)	Color 0.2Lux/F1.4, B/W 0.05Lux/F1.4
Voltage	12VDC/PoE
CMOS Size	1/2.9 inch
3DNR	Yes
DWDR	Yes
Onboard OSD Control	Yes
# of IR LEDs	36 X Φ5
IR LED Range	Up to 100ft (30m)
Gamma Correction	1.6-2.2
Gain Control	Yes
Dimensions	$4^{3}/_{4}$"x$3^{3}/_{8}$" (120x85.28 mm)
Weight	1.5lbs

Features

- 1080p Resolution
- 1/2.9" Sony 2.43 Megapixel CMOS
- 2.8~12mm Varifocal lens
- 36 IR LEDs, up to 100ft IR range
- H.264 Support
- Cables concealed in bracket to prevent tampering
- Heavy-duty vandal-resistant design
- Rugged, weatherproof (IP65) construction
- Split-glass design to eliminate IR reflection
- ICR Module
- 12VDC and PoE 802.3af Operation
- ONVIF Profile S

IP Fixed Bullet Camera

IP
PoE
ONVIF
1080p Resolution

Model Number

NEW

EV-N1206-2W4Q
½.9" Sony 2.12 Megapixel CMOS, 1080p

Specifications

Format	IP
Lens	2.8mm ICR
Viewing angle	90°
Megapixels	2.12MP
Minimum Lux (IR Off)	Color 0.2Lux/F1.4, B/W 0.05Lux/F1.4
Voltage	12VDC/PoE
CMOS size	1/2.9 inch
3DNR	Yes
DWDR	Yes
Onboard OSD control	Yes
# of IR LEDs	1 X IR III
IR LED Range	33~50ft (10-15m)
Gamma correction	1.6-2.2
Gain control	Yes
Dimensions	$2^{5}/_{8}$"x$2^{5}/_{8}$"x$6^{9}/_{16}$" (66x66x166 mm)
Weight	0.8-lb

Features

- 1080p Resolution
- ½.9" Sony 2.12 Megapixel CMOS
- 2.8mm Lens
- H.264 Support
- Rugged, weatherproof (IP65) construction
- ONVIF Profile S
- 12VDC and PoE 802.3af Operation
- Cables concealed in bracket to prevent tampering

IP Varifocal Bullet Camera

IP
PoE
ONVIF
1080p Resolution

Model Number

NEW

EV-N1206-MW4Q
½.9" Sony 2.43 Megapixel CMOS, 1080p

Specifications

Format	IP
Lens	2.8~12mm ICR
Viewing angle	30°-90°
Megapixels	2.43MP
Minimum Lux (IR Off)	Color 0.2Lux/F1.4, B/W 0.05Lux/F1.4
Voltage	12VDC/PoE
CMOS size	1/2.9 inch
3DNR	Yes
DWDR	Yes
Onboard OSD control	Yes
# of IR LEDs	3 X IR III
IR LED range	Up to 160ft (50m)
Gamma correction	1.6-2.2
Gain control	Yes
Dimensions	$3^{11}/_{16}$"x$3^{3}/_{4}$"x$10^{3}/_{8}$" (93x96x263 mm)
Weight	2lbs

Features

- 1080p Resolution
- ½.9" Sony 2.43 Megapixel CMOS
- 2.8~12mm Varifocal lens
- H.264 Support
- Rugged, weatherproof (IP65) construction
- ONVIF Profile S
- Triple Array IR LEDs (equivalent to 48 LEDs), Up to 160ft IR range
- 12VDC and PoE 802.3af Operation
- Cables concealed in bracket to prevent tampering

IP Varifocal Vandal Dome Camera

IP PoE ONVIF 1080p Resolution

Model Number

NEW

EV-N2236-MW4Q

1/2.8" *Sony 2.43 Megapixel CMOS, 1080p*

Features

- 2.8~12mm 3M ICR Lens
- H.264, Dual streams
- 1/2.9" Sony 2.43 Megapixel CMOS
- 1080p Resolution
- Rugged, vandal-resistant design with no exposed screws and concealed cable
- 18 IR LEDs, Up to 50ft IR range
- Rugged, weatherproof (IP65) design
- 12VDC and PoE 802.3af Operation
- WDR (Wide Dynamic Range) for clear images in strong backlight
- ONVIF Profile S
- 3D-NR (3D Digital Noise Reduction) for cleaner images in low light

Specifications

Lens	2.8-12mm ICR
Viewing Angle	30°-90°
Minimum Lux (IR Off)	Color 0.2Lux/F1.4, B/W 0.05Lux/F1.4
3DNR, DWDR	Yes/Yes
# of IR LEDs	18 X Φ5
IR LED Range	Up to 50ft (15m)
Gain Control	Yes
Dimensions	4 7/16"x5 15/16"(112x150x mm)
Weight	2.3lbs

IP 360 Camera

IP PoE ONVIF 1080p Resolution

Model Number

NEW

EV-N6206-ZW4Q

1/1.8" *6 Megapixel CMOS, 1080p*

Features

- 1080p Resolution
- 1/1.8 Sony 6.44mp CMOS
- Day/Night operation: 0 Lux with LEDs ON, 0.02 Lux with LEDs OFF
- Cables concealed in bracket
- 3D-DNR (3D Digital Noise Reduction) for clear images in low light
- 360° Triple-axis rotation
- Heavy-duty vandal-resistant design
- OSD Control

Specifications

Format	IP
Lens	2.1mm Fisheye
Viewing Angle	360°
Minimum Lux (IR Off)	Color 0.2Lux/F1.4, B/W 0.05Lux/F1.4
3DNR, DWDR	Yes/Yes
# of IR LEDs	24 X Φ5
IR LED Range	Up to 50ft (15m)
Gain Control	Yes

IP Corner-Mount Camera

IP PoE ONVIF 1080p Resolution

Model Number

NEW

EV-N4206-2S4Q

1/2.7" *2.43 Megapixel CMOS, 1080p*

Features

- 1080p resolution
- 1/2.7" Megapixel CMOS
- Designed to easily fit corners in office buildings, elevators, jail cells, and more
- 2.9mm Lens
- 12VDC and PoE 802.3af Operation
- Rugged, weatherproof (IP66) design
- 10/100Mbps Ethernet interface (x24)
- ONVIF Support
- IP Rating: IP65

Specifications

CCD	Color: 1/2.7" 2.43M Panasonic CMOS
Max Streaming Speed	1080p @30fps
Video Output Format	H.264/MJPEG, Dual Stream
Viewing Angle	120°
Maximum Illumination	0.1-Lux (F/1.4)(LEDs OFF)
	0.0-Lux (F/1.4)(LEDs ON)
# of IR LEDs	30 (940nm)
Power Supply	12VDC±10%, PoE 802.3af
Dimensions	7 1/2"x5 1/2"x1 11/16" (190x140x75 mm)

IP NVRs

Model Numbers

DRN-104Q NEW
4 Channels

DRN-108Q NEW
8 Channels

DRN-116Q NEW
16 Channels

Available on the App Store

ANDROID APP ON Google play

HD ENFORCER IP ONVIF

Features

- High-resolution recording and playback over IP Networks - up to 1920x1080p
- H.264 Compression
- VGA and HDMI outputs
- Remote monitoring via Browser or Mobile app.
- ONVIF Profile S
- Free CMS software and free P2P service
- Programmable features such as motion detection, event, and more
- Easy and convenient firmware upgrade via USB
- Available without HDD or with 1 TB, 2TB, 4TB HDD

Features

Model			DRN-104Q	DRN-108Q	DRN-116Q
Channels			4	8	16
Frames per sound			120FPS	240FPS	480FPS
Video	Inputs		RJ45 10M/100M/1000M Adaptive Ethernet port		
	Outputs	Main monitor	VGA/HDMI Sync output		
	VGA output (optional)		1920x1080, 1440x900, 1280x1024, 1366x768, 1024x768, 800x600		
Audio	Outputs	Main audio	1Ch, BNC		
		Call audio	Bidirected-talk, BNC port		
	Audio compression		G.711A		
Recording & Storage	Compression method		H.264		
	Recording modes		Continuous, schedule, alarm, motion detection		
	Pre-alarm		Yes		
	Video output		1920x1080, 1440x900, 1280x1024, 1366x768, 1024x768, 800x600		
	Recording bit rate		LBR, VBR,16-8000Kbps		
	Snapshot		BMP		
	Built-in storage interface		2xSATA (4TB max)		
	Export		USB 2.0 port – Supports flash drive, or DVD/RW drive or external USB HDD		
Alarm	Alarm input		x2 via, D-Sub (TTL)		
	Alarm relay output		x1, D-Sub, 1.0A@30VDC or 1.0A@120VAC		
	Alarm detection		NO/NC, Programmable		
	Video loss detection		Programmable		
Connectivity	Network connectivity		RJ-45, 10/100/1000Mbps Ethernet, static IP, DHCP, PPPoE, DDNS		
	Remote operation		Monitoring, playback, recording, system setup, dome camera control, archiving		
	Mobile viewing		IPad/IPhone®, Android™		
	IR Remote		Yes		
	Dome camera control protocol		Pelco P, Pelco D, AD422, Fastrax 2, Panasonic, GE, DSCP, JVC		
	USB		2xUSB 2.0 (Exporting, USB mouse)		
Other	Dimensions		$17^{5}/_{16}$"x$2^{11}/_{16}$"x$14^{1}/_{16}$" (440x68.5x357 mm)		
	Power adapter		AC 100~240V, 50~60Hz, 60W adapter (included)		

A Whole New *Rollerball* Game!

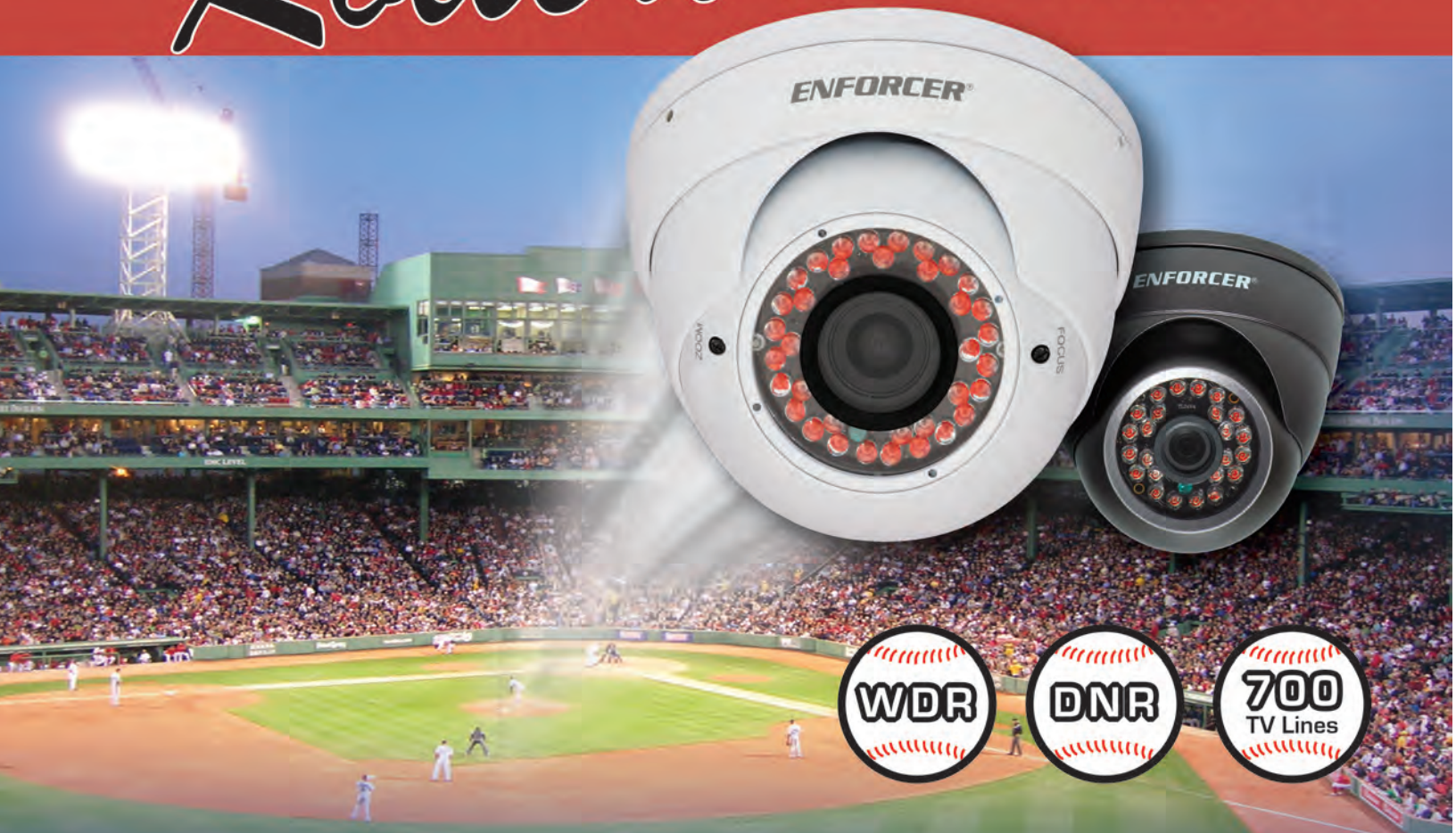

The **3X** Rollerball Series. The best selling **ENFORCER**® Rollerball Cameras now combine the power of WDR, DNR, and IR LEDs to provide clear images in almost any type of lighting situation.

- ⅓" Sony Super HAD II CCD
- 3.6 or 4~9mm lens available
- 360° Triple-axis rotation
- Day/Night operation
- Rugged, weatherproof (IP66) construction
- Wall-mount, ceiling-mount, and conduit box brackets available
- Available in gray or white

Standard models available in 480 or 600 TV Lines

ENFORCER® by **SECO-LARM**

949.261.2999 (CA & Int'l) • 800.622.0800 • e-mail: sales@seco-larm.com • www.seco-larm.com

Fixed Rollerball Cameras

EV-2706-N3GQ

EV-2706-N3WQ

Features

- 1/3" Sony Super HAD II CCD
- 700 TV Lines
- 960H High Resolution
- 3.6mm Lens
- 24 IR LEDs, 50ft IR range
- 360° Triple-Axis Rotation
- Heavy-duty vandal-resistant design
- Day/Night operation: 0 Lux LEDs on, 0.06 Lux LEDs off
- Mounting brackets available see page 57
- Cables concealed in bracket to prevent tampering
- Rugged, weatherproof (IP65) construction
- Split-glass design to eliminate IR reflection
- Weight: 14-oz (400g)
- Dimensions: 3 11/16"x3 5/32" (94x80 mm)

Model Numbers

EV-2706-N3GQ
3.6mm Lens, 24 IR LEDs, gray

EV-2706-N3WQ
3.6mm Lens, 24 IR LEDs, white

Specifications

Pickup elements		976x494 (NTSC)
960H		Yes
Scanning system		2:1 Interlace
Sync		Internal
Video output		1.0V p-p composite output, 75Ω
Minimum Illumination	LEDs Off	0.06 Lux
	LEDs On	0.0 Lux
S/N Ratio		>48dB
DSS (Digital Slow Shutter)		N/A
Operating voltage		12VDC
Current draw	LEDs Off	95mA
	LEDs On	270mA
Operating temperature		14°~122° F (-10°~50° C)
Cable length		38" (98cm)

Varifocal Rollerball Cameras

EV-2706-NFGQ

EV-2706-NFWQ

Features

- 1/3" Sony Super HAD II CCD
- 700 TV Lines
- 960H High Resolution
- 2.8~12mm Lens
- 36 IR LEDs, 100ft IR range
- 360° Triple-Axis Rotation
- Heavy-duty vandal-resistant design
- Day/Night operation: 0 Lux LEDs on, 0.02 Lux LEDs off
- Mounting brackets available see page 57
- Cables concealed in bracket to prevent tampering
- Rugged, weatherproof (IP65) construction
- Split-glass design to eliminate IR reflection
- Weight: 1-lb,13-oz (820g)
- Dimensions: 4 11/16"x3 7/8" (119x98 mm)

Model Numbers

EV-2706-NFGQ
2.8~12mm Lens, 36 IR LEDs, gray

EV-2706-NFWQ
2.8~12mm Lens, 36 IR LEDs, white

Specifications

Pickup elements		976x494 (NTSC)
960H		Yes
Scanning system		2:1 Interlace
Sync		Internal
Video output		1.0V p-p composite output, 75Ω
Minimum Illumination	LEDs Off	0.02 Lux
	LEDs On	0.0 Lux
S/N Ratio		>52dB
DSS (Digital Slow Shutter)		N/A
Operating voltage		12VDC
Current draw	LEDs Off	100mA
	LEDs On	400mA
Operating temperature		-4°~131° F (-20°~55° C)
Cable length		34" (86cm)

CMOS Fixed Rollerball Camera

Model Number

NEW

EV-C2001-N2WQ
2.8mm Lens, 24 IR LEDs

Specifications

Sensor		1/2.9" CMOS Sensor
Resolution		1000 TV lines
Video output format		NTSC
Pickup elements		811x508
Scanning system		2:1 Interlace
Sync		Internal
Video output		1.0V p-p Composite output, 75Ω
IR Cut filter		Yes
Minimum illumination	LEDs Off	0.5 Lux
	LEDs On	0 Lux
Gamma correction		0.45
S/N Ratio		≥50dB
Shutter control		Auto Electric Shutter (AES),1/60~1/100,000 s
Gain control		Auto
White balance		Auto
Operating voltage		12VDC
IP Rating		IP65

Features

- 1/2.9" CMOS Sensor
- 1000 TV Lines
- 2.8mm Lens
- 24 IR LEDs, 50ft IR range
- 360° Triple-Axis Rotation
- Heavy-duty vandal-resistant design
- Day/Night operation: 0 Lux LEDs on, 0.06 Lux LEDs off
- Mounting brackets available see page 57
- Cables concealed in bracket to prevent tampering
- Rugged, weatherproof (IP65) construction
- Split-glass design to eliminate IR reflection
- Weight: 14-oz (400g)
- Dimensions: 3 11/16"x3 5/32" (94x80 mm)

CMOS Varifocal Rollerball Camera

Model Number

NEW

EV-C2001-NMWQ
2.8~12mm Lens, 36 IR LEDs

Specifications

Sensor		1/2.9" CMOS Sensor
Resolution		1000 TV lines
Video output format		NTSC
Pickup elements		811x508
Scanning system		2:1 Interlace
Sync		Internal
Video output		1.0V p-p Composite output, 75Ω
IR Cut filter		Yes
Minimum illumination	LEDs Off	0.5 Lux
	LEDs On	0 Lux
Gamma correction		0.45
S/N Ratio		≥50dB
Shutter control		Auto Electric Shutter (AES),1/60~1/100,000 s
Gain control		Auto
White balance		Auto
Operating voltage		12VDC/24VAC
IP Rating		IP65

Features

- 1/2.9" CMOS Sensor
- 1000 TV Lines
- 2.8~12mm Lens
- 36 IR LEDs, 100ft IR range
- 360° Triple-Axis Rotation
- Heavy-duty vandal-resistant design
- Day/Night operation: 0 Lux LEDs on, 0.02 Lux LEDs off
- Mounting brackets available see page 57
- Cables concealed in bracket to prevent tampering
- Rugged, weatherproof (IP65) construction
- Split-glass design to eliminate IR reflection
- Weight: 1-lb,13-oz (820g)
- Dimensions: 4 11/16"x3 7/8" (119x98 mm)

Rollerball Mounting Brackets

Conduit Box Brackets

Model Numbers:	Compatible with:
EV-DSSGQ *Small, gray*	EV-2706-N3GQ
EV-DSSWQ *Small, white*	EV-2706-N3WQ, EV-C2001-NZWQ
EV-DSLGQ *Large, gray*	EV-2706-NFGQ
EV-DSLWQ *Large, white*	EV-2706-NFWQ, EV-C2001-NMWQ

EV-DSSGQ / EV-DSLGQ

EV-DSSWQ / EV-DSLWQ

Ceiling-Mount Brackets

Model Numbers:	Compatible with:
EV-DCSGQ *Small, gray*	EV-2706-N3GQ
EV-DCSWQ *Small, white*	EV-2706-N3WQ, EV-C2001-NZWQ
EV-DCLGQ *Large, gray*	EV-2706-NFGQ
EV-DCLWQ *Large, white*	EV-2706-NFWQ, EV-C2001-NMWQ

EV-DCSGQ / EV-DCLGQ

EV-DCSWQ / EV-DCLWQ

Wall-Mount Brackets

Model Numbers:	Compatible with:
EV-DWSGQ *Small, gray*	EV-2706-N3GQ
EV-DWSWQ *Small, white*	EV-2706-N3WQ, EV-C2001-NZWQ
EV-DWLGQ *Large, gray*	EV-2706-NFGQ
EV-DWLWQ *Large, white*	EV-2706-NFWQ, EV-C2001-NMWQ

EV-DWSGQ / EV-DWLGQ

EV-DWSWQ / EV-DWLWQ

Conduit Drop Brackets

Model Numbers:	Compatible with:
EV-DDSGQ *Small, gray*	EV-2706-N3GQ
EV-DDSWQ *Small, white*	EV-2706-N3WQ, EV-C2001-NZWQ
EV-DDLGQ *Large, gray*	EV-2706-NFGQ
EV-DDLWQ *Large, white*	EV-2706-NFWQ, EV-C2001-NMWQ

EV-DDSQQ / EV-DDLGQ

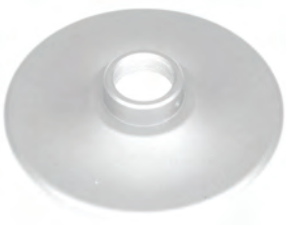

EV-DDSWQ / EV-DDLWQ

12-IR LED Bullet Camera

Features

- ⅓" Sony Super HAD II CCD
- 700 TV Lines, 960H resolution
- 12VDC Operation
- IR LEDs for nighttime use
- Rugged, weatherproof (IP66) design
- Split-glass design eliminates IR reflection

Model Number

EV-1606-N2SQ
2.9mm Lens, 700 TVL, 12 IR LEDs

Specifications

Video output	1.0Vp-p composite video, 75Ω
Video output format	NTSC
960H	Yes
Gain control	Auto
Shutter control	Auto Electric Shutter (AES)
IP rating	IP66
Gamma correction	0.45
# of infrared LEDs	12 (850nm)
IR range	Up to 40ft (12m)

42-IR LED Bullet Camera

Features

- ⅓" Sony Super HAD II CCD
- 700 TV Lines, 960H resolution
- 42 IR LEDs; up to 105ft (32m)
- 12VDC Operation
- Weatherproof for outdoor use (IP66)
- Able to mount to industry-standard lamp holder cover plates
- Heavy-duty, vandal-resistant design
- Cables concealed in bracket
- OSD (On-Screen Display) for programming special features
- OSD settings programmable through in-line joystick or through optional Zeta Series OSD controller

Model Number

EV-1816-NKGQ
2.8~12mm Lens, 700 TV lines

Specifications

Video output	1.0Vp-p composite video, 75Ω
Video output format	NTSC
960H	Yes
Sync	Internal
Shutter control	Auto Electric Shutter (AES)
Gamma correction	0.45
Gain control	Auto
# of IR LEDs	42

1000 TV Line Bullet Camera

Features

- 1000 TV Lines, Megapixel CMOS
- DWDR (Digital Wide Dynamic Range) provides clear images in strong backlight
- 3D-NR (3D Digital Noise Reduction) for cleaner images in low light
- 32x DSS (Digital Slow Shutter) amplifies existing light to capture images in almost total darkness
- Weatherproof (IP67) for outdoor use
- 3-Axis mounting arm
- 12VDC/24VAC Operation
- DC Auto iris varifocal lens with ICR
- OSD (On-Screen Display) for programming special features
- Built-in service monitor port

Model Number

EV-C1303-NMGQ
2.8~12mm Lens, 1000 TV lines

Specifications

Video output	1.0Vp-p composite video, 75Ω
Video output format	NTSC
CMOS	1/3" 1.3MP SONY IMX138
Sync	Internal
Lens	2.8~12mm
Gamma correction	0.45
# of IR LEDs	42
IR Range	Up to 100' (30m)

12-Inch Mirror Camera

Features

- ⅓" Sony Super HAD II CCD
- 2.8mm Lens, 600 TV lines
- 12VDC Operation
- DWDR (Digital Wide Dynamic Range) provides clear images in strong backlight
- 2D Digital Noise Reduction (2D-NR) for extreme low-light conditions
- 3-Axis mounting arm
- Cables concealed in bracket
- OSD (On-Screen Display) for programming special features

Model Number

EV-6600-N2BQ
2.8mm Lens, 600 TV lines

Specifications

Pickup elements	768 x 494 pixels
Video output format	NTSC
Video output	1Vp-p composite video, 75Ω
S/N Ratio	>48dB
Shutter control	Max 1/100,000 sec.
Minimum illumination	0.1 Lux
Current draw	67mA
Operating temperature	14°~122° F (-10° ~50° C)

Covert Ceiling-Mount Camera

Features

- ⅓" Sony Super HAD II CCD
- 3.7mm Pinhole lens (78° viewing angle)
- 700 TV Lines, 960H resolution
- 12VDC Operation
- Contained in a discreet, non-functioning, ceiling-mount housing
- Multiple mounting angles – Camera can face either the side or the bottom of the housing
- Cables concealed in housing
- Dimensions: $4^{3}/_{4}$"x$2^{1}/_{4}$" (120x57 mm)

Model Number

EV-6620-N3WQ
3.7mm Lens, 700 TV lines

Specifications

Pickup elements	976x494 pixels
Video output format	NTSC
Video output	1.1Vp-p composite video, 75Ω
S/N ratio	>48dB (AGC OFF)
Shutter control	1/60~1/100,000 sec.
Gain control	Auto
Current draw	100mA
Operating temperature	14°~122° F (-10°~50° C)

PIR Camera

Features

- ⅓" Sony Super HAD II CCD
- Contained in discreet, non-functioning PIR sensor housing
- 960H Resolution, 700 TV Lines
- DWDR (Digital Wide Dynamic Range) for clear images in strong backlight
- OSD (On-Screen Display) for programming special features
- 12VDC, 3.7mm
- 18 invisible IR LEDs, 50ft IR range
- Dimensions: $4^{1}/_{8}$"x$2^{3}/_{8}$"x$1^{3}/_{8}$" (105x60x35 mm)

Model Number

EV-6681-N3WQ
3.7mm Lens,18 Covert 940nm IR LEDs

Specifications

Video output format		NTSC
Video output		1.0Vp-p Composite video, 75Ω
S/N Ratio		>48dB
Effective pixels		976x494 pixels
Minimum illumination	LEDs Off	0.1 Lux
	LEDs On	0 Lux
Current draw	LEDs Off	70mA
	LEDs On	230mA
Operating temperature		14°~122° F (-10°~50° C)

Flush-Mount UFO Camera

Features

- ⅓" Sony Super HAD II CCD
- 700 TV Lines, 960H resolution
- 12VDC Operation
- Rotates to nearly any angle for flexible installation
- Low-profile design blends into nearly any décor
- Small size protrudes only 1" (25mm) from wall or ceiling
- No exposed screws, tamper-resistant

Model Number

EV-6640-N3WQ
3.7mm Lens, 700 TV lines

Specifications

Video output format	NTSC
Pickup elements	976x494 pixels
Video outputs	1.0Vp-p Composite video, 75Ω
Minimum illumination	0.5 Lux
Shutter control	Auto Electric Shutter (AES), 1/60~1/120,000 s
Gamma correction	0.45
Current draw	130mA

Maglock Camera

Features

- ¼" Sony EXview HAD II CCD
- 700 TV Lines, 960H resolution
- 2.3mm, 170° Wide-angle lens
- 12VDC Operation
- Rugged, weatherproof (IP67) design
- Heavy-duty vandal-resistant design
- Patented design seamlessly integrates with 1,200-lb maglocks; see page 6 and 8 for more information

Model Number

E-941EC2-N1Q
2.3mm Lens, 700 TV lines

Specifications

Video output format	NTSC
Pickup elements	976x494 pixels
Video outputs	1.0Vp-p Composite video, 75Ω
Minimum illumination	0.1 Lux @ F1.9
Scanning system	2:1 Interlace
IP Rating	IP67 (Camera only)
Current draw	74mA

Mini PTZ Camera

Features

- ¼" Sony CCD
- 3.94~46.05 mm Lens
- 12x Optical zoom and 16x digital zoom
- Up to 192x zoom
- Endless 360°/sec pan/tilt motion
- 24VAC Operation
- True Day/Night operation with ICR
- Weatherproof (IP66) for indoor/outdoor use
- Built-in heater and fan
- Maximum of 256 preset target views
- Up to 90° tilt, up to 180° with auto-flip

Model Number

EV-7605-NYWQ
3.9~46mm Lens, 600 TV lines

Brackets

EV-7100CEILM
Ceiling-mount

EV-7100CORNM
Corner-mount

EV-7100FLUSM
Flush-mount

EV-7100POLEM
Pole-mount

Wall-Plate Camera

Model Number

EV-5105-N1SQ
2.3mm Lens, 700 TV Lines

Specifications

Video output format	NTSC
Pickup elements	976x494 pixels
Video outputs	1.0Vp-p Composite video, 75Ω
Viewing angle	170°
Minimum illumination	0.1 Lux@F/2.0
IP Rating	IP67
Current draw	74mA
Operating temperature	14°~122° F (-10°~50° C)

Features

- 1/3" Interline Color CCD
- 700 TV Lines, 960H resolution
- 2.3mm, 170° Wide-angle lens
- 12VDC Operation
- DWDR (Digital Wide Dynamic Range) provides clear images in strong backlight
- Rugged, weatherproof (IP67) design
- Heavy-duty vandal resistant design
- 2D Digital Noise Reduction (2D-NR) for extreme low-light conditions
- Low-profile design – Install on doors, walls, car bumpers, entryways, and more
- Includes two stainless steel mounting plates (single-gang and slimline)
- Camera can be installed without mounting plates

Installtion Options:

Corner-Mount Camera

Model Number

EV-4606-N3SBQ
3mm Lens, 1000 TV lines, 30 940nm IR LEDs

Specifications

Pickup elements		1,305(H)X1049(V)
Video output format		NTSC
Video output		1.0Vp-p composite video, 75Ω
Scanning system		2:1 Interlace
Viewing angle		135°
Minimum	LEDs Off	0.1 Lux
	LEDs On	0.001 Lux
S/N ratio		50dB
Gamma correction		0.45
Gain control		Auto
IP rating		IP65
Current draw	LEDs Off	80mA
	LEDs On	250mA
Operating temperature		14°~122°F (-10°~50°C)
Weight		15-oz (430g)

Features

- 1/3" Sony CMOS Sensor
- 1000 TV Lines
- 12VDC Operation
- DWDR (Digital Wide Dynamic Range) provides clear images in strong backlight
- Rugged, weatherproof (IP65) design
- 2D Digital Noise Reduction (2D-NR) for extreme low-light conditions
- Designed to easily fit corners in office buildings, elevators, jail cells, and more
- 30 Invisible 940nm IR LEDs for discreet monitoring

12VDC High-Amp Power Supplies

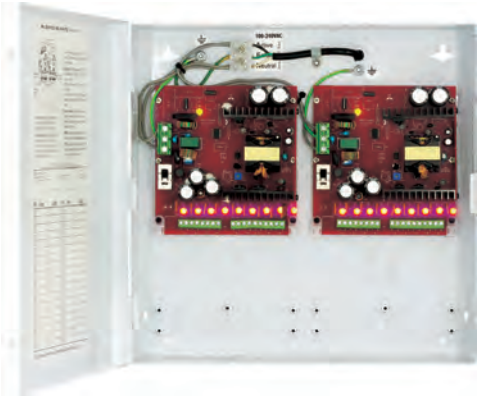

PS-U1812-PULQ shown

Model Numbers

PS-U1812-PULQ
18 Outputs, 12A cont., PTC fuses

PS-U3612-PULQ*
36 Outputs, 12A cont., PTC fuses

Specifications

Model	PS-U1812-PULQ	PS-U3612-PULQ
Outputs	18	36
Total supply current	12A	
Max. current (output)	2.5A	
Output fuse	PTC	
Output voltage	12.6~13.5 VDC, adjustable	
Input fuse	Micro fuse 3.15A@250VAC	
Input voltage	100~240 VAC (47~63 Hz)	
Dimensions	12 1/8"x12 1/4"x3 5/8" (308x311x92 mm)	
Weight	7-lb 10-oz (3.45kg)	

Features

- 12-Amp supply current
- Universal 100~240 VAC input
- 12.6~13.5 VDC Output
- Ultra-low ripple voltage for improved image quality
- Adjustable output to compensate for voltage drop
- Outputs protected with 2.5-Amp PTC
- High-efficiency switching type
- Built-in protection against short circuit and overheating
- Individual channel status LEDs
- Heavy-duty steel case with removable cover
- Dimensions: 12 1/8"x12 1/4"x3 5/8" (308x311x92 mm)

*Special order item.

12VDC Switching CCTV Power Supplies

PS-U0906-PULQ shown

Model Numbers

PS-U0406-PULQ
4 Outputs, 6A cont., PTC fuses

PS-U0906-PULQ
9 Outputs, 6A cont., PTC fuses

PS-U1806-PULQ
18 Outputs, 6A cont., PTC fuses

Specifications

Model	PS-U0406-PULQ	PS-U0906-PULQ	PS-U1816-PULQ
Outputs	4	9	18
Total supply current	6A		
Max. current (output)	2.5A		
Output fuse	PTC		
Output voltage	12.6~13.5 VDC, adjustable		
Input fuse	Micro fuse 3.15A@250VAC		
Input voltage	100~240 VAC (47~63 Hz)		
Dimensions	10"x7 3/4"x3 5/8" (254x197x92 mm)		
Weight	4-lb 7-oz (2.01kg)		

Features

- New lightweight, cost-effective design
- High-efficiency switching type
- Ultra-low ripple voltage for improved image quality
- Adjustable output to compensate for voltage drop
- Built-in protection against short circuit and overheating
- Individual channel status LEDs
- Heavy-duty steel case with removable cover

12VDC/24VAC Power Supply

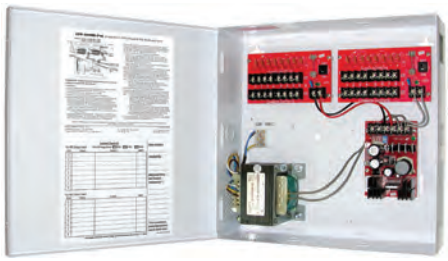

Model Number

EVP-124M6P16Q
16 Outputs, 6A cont., PTC fuses

Specifications

Output voltage	24VAC/12VDC
Number of Outputs	8@24VAC/8@12VDC
Total Output Current	3A per output
Main Fuse Rating	5.0A @ 250VAC
Output Fuse Rating	1.1A @ 250VAC
Input voltage	110/220 VAC

Features

- Individual status LEDs
- 6 Amp continuous, 8 outputs with 3A@12VAC and 8 outputs with 3A@24VAC
- Each output individually fused
- Adjustable DC voltage output
- Extra-large enclosure: 12”x12”x3$^{1}/_{2}$” (305x305x89 mm)

Power Distribution Board

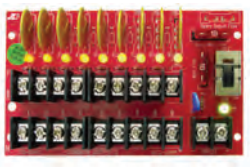

Model Number

PD-9PSQ
9 Outputs,main fuse: 5A@250VAC

Specifications

Output fuse type	PTC
Output fuse rating	1.1 A
No. of Output	9
Main fuse	5A

Features

- Used in a wide variety of applications including CCTV, Access, etc
- Surge-protected outputs
- Handles up to 28VAC/DC
- Individual red LEDs for each output
- Green power LED
- Power ON/OFF master switch
- Size: 5$^{3}/_{16}$”x3$^{1}/_{8}$”x1”(132x79x25.5 mm)

24VAC Switching CCTV Power Supplies

EVP-1SA4P9UL shown

c UL us LISTED

Model Numbers

EVP-1SA4P4UL
4 Outputs, 4A cont., PTC fuses

EVP-1SA4P9UL
9 Outputs, 4A cont., PTC fuses

EVP-1SA8P16UL
16 Outputs, 8A cont., PTC fuses

Specifications

Model	P4UL	P9UL	P16UL
Outputs	4	9	16
Total Output Current	4 Amps		8 Amps
Main Fuse Rating	5.0 Amps @ 250VAC		
Output Fuse Rating	1.1 Amps @ 250VAC		

Features

- Each output individually fused
- Individual red LED for each output
- Main power on/off master switch
- Spare fuse and 6-foot power cord included
- Heavy-duty steel case to protect the power connections
- Input: 120VAC, 60z. Output: 24VAC
- Removable steel cover for easy access to power connections
- Ventilation holes to prevent heat build-up
- Dimensions: 10$^{1}/_{8}$”x7$^{3}/_{4}$”x3$^{1}/_{2}$” (254x196x89 mm)
- Knock-out for optional cam lock
- AC terminal block for easy connection from transformer to 6-foot power cord

Rack-Mount DC CCTV Power Supply

Model Number

PH-U1612-PULQ
16 Outputs, 12A cont., PTC fuses

Specifications

Fuse type	PTC
Input voltage	100~240 VAC
# of outputs	16
Total supply current	12A@12VDC max.
Max. current per output	3Amp
Adjustable voltage output	12.6~13.5 VDC
Rack size	1U 19" (45x445x289mm)
Dimensions	$1^{3}/_{4}$"x$17^{1}/_{2}$"x$11^{13}/_{32}$" (45x445x289 mm)
Weight	7-lb 14-oz (3.56kg)

Features

- Universal 100~240 VAC input
- 12.6~13.5 VDC Output
- High-efficiency switching type
- Adjustable output to compensate for voltage drop
- Outputs protected with 3-Amp PTC fuses
- Built-in protection against short circuit and overheating
- Flexible cable management options
  - 2 Cable-management brackets with 3 different mounting points
  - 2 Cable-management hooks with 3 different mounting points
- Dual-color LED status indicators for each output (blue - normal, red - fault)
- Rack mount options:
  - Facing forward - easy access to indicator LEDs
  - Facing backward - easy access to connections
- Removable screw terminal blocks for convenient installation and reliable connections
- Rack, wall or desk (stackable) mount
- Dimensions: $1^{3}/_{4}$"x$17^{1}/_{2}$"x$11^{3}/_{8}$" (44x445x289 mm) (excluding brackets)

24/28VAC Rack-Mount Power Supply

Model Number

PH-A1612-PUQ
16 Outputs, 12A cont., PTC fuses

Specifications

Fuse type	PTC
Input voltage	120 VAC
# of outputs	16
Total supply current	12A@24VAC max
	10A@28VAC max
Max. amps. per ch.	2A@24VAC max
Rack size	1U 19" (45x445x289mm)
Dimensions	$1^{3}/_{4}$"x$17^{1}/_{2}$"x$11^{13}/_{32}$" (45x445x289 mm)
Weight	14-lb 14-oz (6.75kg)

Features

- Field-selectable 24 or 28 VAC output
- 120VAC Input, 60Hz
- 12A Continuous supply current
- Compact 1U height fi ts into standard 19" racks
- Each output individually PTC fused @ 3A
- Individual dual color output status LEDs
- Flexible cable management options – brackets and hooks included
- Removable screw terminals for convenient installation and reliable connections

Plug-and-Play Backup Power

SB-P1012-26Q

SB-L10V1-20Q

Model Numbers

SB-P1012-26Q NEW
10W, 2600mAh, Plug-in

SB-L10V1-20Q NEW
10W, 2000mAh, In-Line

Specifications

Model		SB-P1012-26Q	SB-L10V1-20Q
Type		Plug-in UPS adapter	In-line UPS
Input		85~265VAC	5/7.5/9/12VDC
Output		12VDC	5/7.5/9/12VDC
Backup time	Half Load	70 min	60 min
	Full Load	30 min	25 min

Features

- Real-time backup power with no break when input power is lost
- DC UPS Auto-start
- LED indicators for power and backup operation
- Dimensions: (SB-P1012-26Q) $3^{7}/_{16}$"x$2^{7}/_{8}$x"$1^{5}/_{32}$" (87x59.8x29mm)

Additional features for SB-L10V1-20Q

- Auto-recognize voltage (5/7.5/9/12VDC) input and set corresponding output
- Additional indicator LEDs for output voltage and an audible / visible (LED) alarm warning of an overload, voltage issue, or low battery.
- Dimensions: (SB-L10V1-20Q) $3^{3}/_{8}$"x$2^{1}/_{4}$x"$1^{21}/_{32}$" (85x57x42 mm)

4-Channel "Brick" Power Supply

c UL us LISTED

Model Number

PA-U0405-NULQ
4 Outputs, 5A Continous

Specifications

Over current protection	12VDC/6.8A
Output voltage	12~13.8 VDC
Input fuse	3.15A@250VAC
Input voltage	100~240 VAC
Operating temperature	14°~113° F (-10°~45° C)

Features

- 5 Amp continous, 4 outputs
- Dimensions
  - $5^{7}/_{8}$"x$2^{3}/_{16}$"x$1^{5}/_{16}$" (150x55x33 mm)
- Individual status LEDs
- Weight
  - 13.4-oz (380g)

Power Converters

ST-LA108-TPQ & ST-LA115-TPQ

ST-LA130-TTQ

Model Numbers

ST-LA108-TPQ
0.8A@12VDC

ST-LA115-TPQ
1.5A@12VDC

ST-LA130-TTQ NEW
3.0A@12VDC

Features

- Three models available, providing varying degrees of low-voltage DC output
- Built-in overload protection
- Regulated and filtered output
- LED indicates power input
- 2.1mm DC Plug with pigtail for simple and quick installations (except ST-LA130-TTQ)

Specifications

Model	ST-LA108-TPQ	ST-LA115-TPQ	ST-LA130-TTQ
Output connector	2.1mm DC Plug		
Input voltage	16~28 VAC/VDC	18~28 VAC/VDC	18~24 VAC/VDC for 12VDC 24~28 VAC or 26~28 VDC for 24VDC
Output voltage	12VDC		12/24 VDC
Output current	0.8A	1.5A	3A@12VDC, 1.5A@24VDC

Passive HD Video Baluns

EB-P101-01HQ

EB-P101-20HQ

HD

Model Numbers

EB-P101-01HQ NEW
Standard Balun

EB-P101-20HQ NEW
Balun with 6" pig-tail

Features

- 3-in-1 TVI / CVI / AHD video up to 1080p
- Transmits up to 1443ft (440m) depending on format, resolution, and cable used
- PAL / NTSC / SECAM compatible
- Built-in TVS surge protection
- Anti-static and wave filters
- Lightning protection – Grade III
- 60dB Crosstalk and noise immunity
- Exceptional interference rejection
- Passive operation – No external power required
- Real-time transmission over low-cost
- Cat5e/6 cable instead of costly coaxial cable
- Quick-connect terminals for easy installation
- Small size allows mounting of multiple baluns behind a DVR

Elite Passive Video Baluns

EB-P501-01Q & EB-P501-01SQ

EB-P501-20Q

c UL us LISTED

Model Numbers

EB-P501-01Q
Standard Balun

EB-P501-01SQ
Balun with built-in surge protection

EB-P501-20Q
Balun with 6" pigtail

Features

- Gold-plated BNC connector
- Transmits up to 1,300ft (400m) color video, 1,950ft (600m) B&W video
- Uses low-cost Cat5e/6 cable instead of costly coaxial cable
- Passive operation
- Screw terminals for easy installation
- High immunity from interference
- Small size allows for mounting multiple units behind a DVR
- Sleek design incorporates ergonomic grip for easy installation
- Lifetime warranty
- Sold in quantities of 10

Passive Video Baluns

EB-P101-01Q

EB-P101-20Q

Model Numbers

EB-P101-01HQ
Standard Balun

EB-P101-20HQ
Balun with 6" pig-tail

Features

- Transmits up to 1,300ft (400m) color video, 1,950 (600m) B&W video
- Passive operation - No external power required
- Uses low-cost Cat5e/6 cable instead of costly coaxial cable
- Quick-connect terminals for easy installation
- High immunity from interference
- Sold in quantities of 50

Passive Video Baluns

Passive Weatherproof Balun

EB-P101-25WQ *Weatherproof Balun*

- Weatherproof for outdoor applications
- Transmits up to 1,300ft (400m) color video or up to 1,950ft (600m) B/W video
- High immunity from interference
- Built-in surge protection
- Includes six weatherproof connectors

Passive Video Balun with Ground Loop Isolator

EB-P101-24GQ *Ground loop Balun*

- Transmits up to 1,300ft (400m) color video or up to 1,950ft (600m) B/W video
- Built-in ground loop isolator
- High immunity from interference
- Screwless terminals for quick installation
- Built-in surge protection

Baluns, Extender and Converter

Video, Power, and Data Balun

EB-P101-20VQ *DC Plug and DC jack, RJ45*

- Transmits up to 1,300ft (400m) color video or up to 1,950ft (600m) B/W video
- Transmits power for 12/24 VAC/VDC cameras
- Includes DC plug and DC jack (only one used at a time)
- Uses low-cost Cat5e/6 cable instead of costly coaxial cable
- Built-in surge protection

USB Extender

DE-S101Q *USB 1.1, Passive, 1 input, 1 output*

- Extends USB devices over Cat5e/6 cable up to 150ft (46m)
- USB 1.1 Compliant
- Easily control a DVR remotely without accessing a network or the internet
- Passive operation – no power required
- Small size: 2½"x1$^{7}/_{16}$"x7/8" (64x37x22 mm) excluding the 9" (230mm) USB pigtail

RS-232 to RS-485 Converter

EVA-RS1 *Range: ¾ mi (1,200m)*

- 9-Pin DB-9 female connector for RS-232 to 2-Wire removable terminal block for RS-485
- Two wire, differential signals, half duplex
- Auto-switching baud rate, speed up to 115,200 baud (115.2 kbps) over a distance of 1,200m
- Up to 32 devices may be connected together in RS-485 multi-drop operation
- Removable terminal blocks

IP Extender

IP Extender are available to extend the range of IP cameras or other devices up to 3,900ft (1,200m) over Cat5e/6 or up to 5,900ft (1,800m) over Coax.
See pgs. 74-75

NE-SE01-020Q Shown

Passive Video Transceivers

Model Numbers

EB-P104-01Q
4 Channels

EB-P116-01Q
16 Channels

EB-P104-01Q

EB-P116-01Q

Features

- Transmits up to 1,300ft (400m) color video or up to 1,950ft (600m) B&W video
- Passive operation - No external power required
- Built-in surge protection
- Transmits video over Cat5e/6
- Removable terminal blocks or RJ45 connectors
- Connects to cameras, DVRs, multiplexers, and other devices

Active Video Baluns

Model Numbers

EVT-AB1
Active video balun set

EVT-TB1-42T
Active video balun transmitter

EVT-RB1-4T2
Active video balun receiver

EVT-TB1-42T

EVT-RB1-4T2

PATENTED

Features

- Active operation - The transmitter amplifies the video signal for excellent picture quality at long distances
- Gold-plated BNC connector for added reliability and longer life
- High immunity from interference
- Terminal blocks for easy installation
- Transmits a B&W video signal up to 1.5 miles (2.4km) or color up to 0.9 miles (1.5km)
- 12VDC power - adapter included, or optional 24VAC transformer
- Uses low-cost Cat5e/6 cable instead of costly coaxial cables
- Includes a BNC connector and terminal blocks - No need to waste time crimping RJ-45 connectors
- Surge protection, ground lifting, and transient protection
- Patented interlocking design for clean, and professional installs

Rack-Mount Active Video Balun Hub

Model Number

EVT-AH16-VT2Q
16-Port active balun hub

Features

- Rack-mount or stackable
- Transmits up to 3,940ft (1.2km) with passive baluns or 5,000ft (1.5km) with active transmitter
- Compact 1U mounts in a standard 19" rack
- Video in: 16 (terminal blocks)
- Video out: 32 (BNC connections)
- Power input: 12~24 VAC/VDC
- Includes 12VDC 1.5-Amp power adapter
- Current draw: 500mA
- Built-in video and data surge protection

Midpoint VPD Combiners

Model Numbers

EB-P304-01MQ NEW
4 Channels, passive operation

EB-P316-60MQ NEW
16 Channels, passive operation

EB-P304-01MQ

EB-P316-60MQ

Features

- Installs at a point between baluns on the camera end of an installation and a video transceiver on the DVR end of an installation
- Video and data signals pass through the unit to a video transceiver while power enters the unit to power the CCTV cameras
- LEDs indicate power present
- T-568B Standard
- Can be wall-mountable or desk-mounted (EB-P316-60MQ is also rack-mountable)
- Connect 4 or 16 cameras using low-cost Cat5e/6 cable

Specifications

Model		EB-P304-01MQ	EB-P316-60MQ
Type		Passive Midpoint	
Video Range	CVBS	984' (300m)	
	HD-AHD	720p: 1050' (320m); 1808p: 722' (220m)	
	HD-CVI	720p: 1476' (450m); 1080p: 820' (250m)	
	HD-TVI	720p/1080p: 820' (250m)	
Video format		NTSC, PAL, SECAM	
Maximum input		1Vp-p	
Impedance	Coax	75Ω@1MHz	
	RJ45	100Ω@1MHz	
Max. amperage		1A@12VDC/24VAC	
Data Range		2,400' (800m)	
Fuse		1.5A max/CH	

Endpoint VPD Combiners

Model Numbers

EB-C304-01EQ NEW
4 Channels, active operation

EB-P316-60EQ NEW
16 Channels, passive operation

EB-C304-01EQ

EB-C316-60EQ

Features

- For use with VPD baluns such as EB-P101-20VQ (see page 67)
- Transmits power and data to the camera while receiving video from the camera
- Installs at the DVR end of an installation
- Can be wall-mounted or desk-mounted (EB-P316-60EQ also rack-mountable)
- LEDs indicate power present
- Connect 4 or 16 cameras using low-cost Cat5e/6 cable
- T-568B Standard
- Active models also feature a built-in power supply (1 Amp per channel) to power CCTV cameras:
  - 24VAC for models EB-C304-01EQ

Specifications

Model		EB-C304-01EQ	EB-P316-60EQ
Type		24VAC Endpoint	Passive Endpoint
Video Range	CVBS	984' (300m)	
	HD-AHD	720p: 1050' (320m); 1808p: 722' (220m)	
	HD-CVI	720p: 1476' (450m); 1080p: 820' (250m)	
	HD-TVI	720p/1080p: 820' (250m)	
Video format		NTSC, PAL, SECAM	
Maximum input		1Vp-p	
Impedance	Coax	75Ω@1MHz	
	RJ45	100Ω@1MHz	
Max. amperage		1A@24VAC	1A@12VDC/24VAC
Data Range		2,400' (800m)	
Fuse		1.5A max/CH	
Input power		110VAC	N/A

CCTV Connectors

Illuminated Power Connectors
CA-1610-3FLQ

- 2.1mm DC Plug with LED and 3' (0.9m) red/black wires, LED indicates power and polanty

Illuminated Power Connectors
CA-1510-3FLQ

- 2.1mm DC jack with LED and 3' (0.9m) red/black wires, LED indicates power and polanty

Illuminated Power Connectors
CA-1615-06LQ

- 2.1mm DC jack to 2.1mm DC plug with 6" (15cm) wire

DC Connectors
EVA-F5521-3Q

- 2.1mm DC Plug pigtail connector with 3' (0.9M) red/black wire

DC Connectors
EVA-M5521-3Q

- 2.1mm DC Jack pigtail connector with 3' (0.9M) red/black wire

DC Connectors
CA-161T

- 2.1mm DC Plug-to-terminal block

DC Connectors
CA-151T NEW

- 2.1mm DC Jack-to-terminal block

DC Connectors
CA-161P NEW

- 2.1mm DC Plug-to-terminal block (screwless)

DC Connectors
CA-151P NEW

- 2.1mm DC Jack-to-terminal block (screwless)

DC Connectors
CA-1616Q

- 2.1mm DC Plug-to-plug adapter

DC Connectors
CA-1515Q

- 2.1mm DC Jack-to-jack adapter

DC Connectors
CA-1526-1F

- 2.1mm DC Jack-to-dual DC plug with 1' wires

Audio Connector
CA-1A1T NEW

- 3.5mm Audio Plug-to-terminal block

BNC Connectors
CA-111P NEW

- Male BNC-to-terminal block (screwless)

BNC Connectors
CA-121T NEW

- Female BNC-to-terminal block

BNC Connectors
EVA-CB0R1Q

- BNC-to-RCA connector (gold-plated)

BNC to VGA Converters

Model Numbers

VC-1BAQ
720x480 (NTSC)

VC-3BAQ
1280x1024 (NTSC)

VC-1BAQ

VC-3BAQ

Features

- Converts almost any LCD monitor into a security monitor
- Video input auto-configure
- OSD (On-Screen Display) for programming special features
- Output: NTSC: 720x480, PAL: 720x576
- Desktop, VESA, or wall mountable

VC-3BAQ only:

- Similar to VC-1BAQ, but with:
  - Up to 1280x1024 NTSC
- BNC pass through output
- Stores settings in case of power loss

Specifications

Model	VC-1BAQ	VC-3BAQ
Conversion type	BNC to VGA	
Input signal	1.0Vp-p, 75Ω BNC Composite	
Output signal	VGA: 0.7Vp-p RGB, 15 pin female D-sub	VGA: 0.7Vp-p RGB, 15 pin female D-sub
		1.0Vp-p, 75Ω BNC Composite
Current consumption	200mA@5VDC	800mA@5VDC
Maximum resolution	720x480	1280x1024
Power source	1A@5VDC, 2.5mm	1A@5VDC, 2.5mm
Dimensions	$5^{3}/_{4}$"x$2^{5}/_{8}$"x$1^{1}/_{16}$" (145x67x27 mm)	$3^{3}/_{8}$"x$3^{1}/_{4}$"x$1^{1}/_{16}$" (85x83x27 mm)
Weight	7.8-oz (220g)	7.2-oz (205g)

VGA to BNC Converter

Model Number

VC-2VAQ
1024x768 (NTSC)

Features

- Connect a DVR with VGA output to an existing monitor with BNC input
- Video standards: NTSC/PAL
- Auto configure resolution: Up to 1024x768 (up to 75Hz)
- Dual composite video (BNC) and VGA output ports
- Gold-plated BNC connector for longer life
- On-screen display (OSD) for image adjustments including size, brightness, contrast, hue, saturation, sharpness, and more
- Quick installation – no driver or operating system requirements
- Includes 5VDC power supply

Specifications

Conversion type	VGA to BNC
Input signal	VGA
Output signal	VGA: 0.7 Vp-p RGB 15 pin female D-sub
	1.0Vp-p, 75Ù BNC Composite
Current consumption	500mA@5VDC
Maximum resolution	1024x768
Power source	1A@5VDC, 2.5mm
Dimensions	$4^{13}/_{16}$"x$3^{3}/_{16}$"x$1^{1}/_{16}$" (122x81x27 mm)
Weight	9.3-oz (265g)

Video Amplifiers

VA-2101B-WQ

VA-2404B-WQ

Model Numbers

VA-2101B-WQ
1 Input, 1 output

VA-2404B-WQ
4 Inputs, 4 outputs

Specifications

Model	VA-2101B-WQ	VA-2404B-WQ
Maximum range	3280' (1000m)	
Video input level	0.12~2Vp-p, 75ohms	
Video output level	1Vp-p, 75ohms	
Video bandwidth	10hz-10MHz	
Power supply	12VDC	
Current consumption	100mA	220mA
Dimensions	5"x4 1/8"x1 3/8" (127x104x35 mm)	
Weight	4.1-oz (116g)	6.3-oz. (116g)

Features

- Compatible with color and B/W signals
- Transmission distance: 3,280' (1,000m)
- Connect to a video camera, multiplexer, DVR and so on
- Sharpness and brightness adjustments for each channel
- Gold-plated BNC connectors
- 12VDC power adapter included
- Pass-through circuit: Power output can power nearby devices

Video Distributors

VA-1102B-WQ

VA-1104B-WQ

Model Numbers

VA-1102B-WQ
1 Input, 2 outputs

VA-1104B-WQ
1 Input, 4 outputs

Specifications

Model	VA-1102B-WQ	VA-1104B-WQ
Number of inputs	One (1)	
Number of outputs	Two (2)	Four (4)
Video output format	NTSC or PAL	
Video input level	0.8~1.2Vp-p, 75ohms	
Video output level	1Vp-p, 75ohms	
Image gain	10dB	
Video bandwidth	10hz-10MHz	
Power supply	12VDC 500mA / 24VAC	
Current consumption	40mA	100mA
Dimensions	2 7/8"x1 7/8"x 1 5/8" (73x46x42 mm)	4 1/4"x3"x1 1/4" (112x76x31 mm)
Weight	65g	115g

Features

- Distributes 1 video input to 2 or 4 video outputs
- Operation: 12VDC or 24VDC
- Connect to a video camera, multiplexer, DVR and so on
- Patented interlock design connects and locks together with SECO-LARM CCTV baluns (VA-1102B-WQ only)
- LED power indicator
- Pass-through circuit: Power input and output can power nearby devices (VA-1102B-WQ only)
- Signals are cleaned and buffered to ensure clear, crisp video is displayed up to 984' (300m)
- Includes a 12VDC power adapter

Ground Loop Isolator

VG-1C12BQ

- Reduces ground loop interference
- Built-in surge suppressor
- Passive operation – No external power required
- High immunity from interference – Built-in impedance coupled device and noise filter helps reduce RF interference, cross talk, picture tearing, and other picture quality problems
- BNC terminals for easy installation

Video Surge Protector

VS-1V12BQ

- Helps prevent damage to sensitive CCTV equipment such as cameras, monitors, digital video recorders, and video splitters
- Intercepts repeated surges that could damage video equipment
- Helps protect against power surges or lightning strikes
- Passive operation – No external power required
- Gold-plated BNC connector improves reliability and product life
- Includes a 16" grounding wire for ground

HD-SDI Surge Protector

VS-1V22AQ

- Helps prevent damage to sensitive HD-SDI equipment such as cameras and DVRs
- Passive operation - no external power required
- Gold-plated BNC connector improves reliability and product life
- Includes a 16” grounding wire for ground

PoE Surge Protector

IPV-P188Q

- Helps prevent damage to sensitive networking equipment
- RJ45 Jack to RJ45 jack
- Power and single line protection
- 10/100 Base-T Cat5/5e compatible
- Support mid-span PoE and end-span PoE
- 802.3af/at PoE compatible
- Includes a 16” grounding wire for ground

IP Surge Protector

IPV-PD88Q

- Helps prevent damage to sensitive analog CCTV equipment such as cameras, monitors, DVRs, and video splitters
- Installs on Cat5e/6 4-pair UTP cable with RJ45 jacks
- Passive operation - No external power required
- Includes a grounding post

HDMI Surge Protector

VS-1AHHAQ

- Helps prevent damage to sensitive HDMI equipment such as players, monitors, and projectors.
- Intercepts repeated surges and spikes that could damage HDMI A/V equipment.
- Built in ESD, EFT
- Passive operation - no external power required
- Includes a 12” grounding wire for ground

PoE Injector

Model Number

NJ-P101M-PQ NEW
Basic PoE Splitter/Injector

Specifications

Transmission Medium	Cat5e/6 UTP
Input Voltage	≤50VDC
Transmission Distance	328ft (100m) max
Transmission Current	1A max
Working Temperature	14°~158°F (-10°~70°C)
Storage Temperature	-22°~158°F (-30°~70°C)
Humidity	0 to 95%
Dimensions	$2^{1}/_{16}$"x$1^{1}/_{8}$"x$^{13}/_{16}$" (52x28x21 mm)
	With 5.9" (15cm cable)

Features

- Includes splitter and injector
- Works with all DC powered non-POE devices up to 50VDC
- Supports up to 100Mb/s networks
- Use existing Cat5e/6 wiring to extend power to non-PoE devices
- Plug & play installation
- For distances up to 328ft (100m)

PoE Repeater

PoE

Model Number

NR-P101FQ NEW
802.3af Compliant

Specifications

Connector	In/Out	RJ45
Power consumption	Standby	1.1W (23mA)
	@10Mbps	1.44W (30mA)
	@100/1000 Mbps	1.92W (40mA)
Transmission Range	Single repeater	Up to 787ft (240m)
	Two repeaters	Up to 1,181ft (360m)
Max Device Power Range with PoE switch	1st PoE Repeater	2nd PoE Repeater
	8.58W at 787ft (240m)	4.21W at 1,181ft (360m)
PoE	IEEE 802.3af Standard, 48V, 12.95W	
Data Link	Pin 1/2, 3/6, 4/5, 7/8	
Power Link	Pin 1/2 (+),3/6 (-) End-Span	
Material	Aluminum	
Operating temperature	32°~131° F (0°~55° C)	
Dimensions	$2^{5}/_{8}$"x$4^{5}/_{16}$"x$1^{1}/_{16}$" (67x110x27 mm)	
Weight	6.4 oz. (180g)	

Features

- Extends power and data beyond the normal limit of 328ft (100m)
- Standard PoE IEEE 802.3af compliant
- Installs on Cat5e/6 4-pair UTP cable with RJ45 jacks
- Supports 10/100/1000 BASE-T transmission rates
- Easy plug-and-play installation
- Passive operation – no external power required
- Auto-sensing for detecting PoE or non-PoE devices
- Built-in LED status indicators
- Sealed and fanless for increased reliability
- Compact, wall-mountable

Ethernet Extenders

Model Numbers

IPB-A1100Q*
Ethernet over Cat5e/6 cable

IPB-A1200Q*
Ethernet over Coax cable

Specifications

Model	IPB-A1100Q	IPB-A1200Q
Input	RJ-45	
Output	RJ-45	BNC
Voltage	5VDC (adapter included)	
Current draw (power supply)	750mA	
Link cable	Cat5 or better	RG59/U or better
Cat5e/6 cable	TIA/EIA—568-B	

Features

- Extends the range of IP cameras or any TCP/IP device beyond the 300ft (100m) limit of Ethernet
- Does not filter out any protocols, codes, or applications, ensuring compatibility with most IP cameras
- Status LEDs show power status, link status, and if the unit is set as a receiver
- Easy setup and installation
- Each kit includes one transmitter, one receiver, and two 5VDC power adapters
- Range:
  - IPB-A1100Q—Up to 3,900ft (1,200m)
  - IPB-A1200Q—Up to 5,900ft (1,800m)
- Ethernet speed: 10/100Base-T

*Special order item.

Passive Ethernet over Coax

Model Number

NEW

NE-SE01-020Q
Up to 650ft (200m)

Specifications

Type	Passive Ethernet Extender over Coax
Input connector	RJ-45
Output connector	BNC
Ethernet speed	10/100Mbps
Standard	IEEE802.3 10Base-T
Operating temperature	-4°~158° F (-20°~70° C)
Dimensions (Excluding pigtail)	$2^{3}/_{8}$"x$1^{1}/_{8}$"x$1^{3}/_{16}$" (60x29x20 mm)

Features

- 1 Channel Ethernet over coax
- 10 Mbps Full duplex
- Transmission distance: 650ft (200m)
- Link Cable: RG59/U or better
- Passive operation - no external power required
- Built-in surge protection
- Fast and easy to install
- Bidirectional – can operate as transmitter and receiver
- Sold as a set

Ethernet over Coax with PoE

Model Number

NEW

NE-AE01-030TQ
Up to 650ft (200m)

Specifications

Link Connection	BNC
Ethernet Connection	RJ45
Linking Cable	75Ω coax cable
Range	984ft (300m)
PoE mode setting	Mid-span/ End-span
LED indicator	Power (green)
Power	1.25W
Temperature	32°~131°F (0°~55°C)
Dimensions	$2^{5}/_{8}$"x$3^{7}/_{16}$"x$1^{1}/_{16}$" (67x87x27cm)

Features

- Extends IP/PoE signal camera over coax
- Connects IP/PoE camera to 10/100BaseT PoE Injector/Switch over one coax cable.
- Supports PoE: IEEE802.3af/at
- Supports 10/100 Mbps transmission rate
- Power source from PoE Injector/ PoE Switch (order separately)

1-Channel RF Receivers

Model Numbers

SK-910RBQ
315MHz

SK-910RB-4Q*
433.92MHz

Specifications

Model	SK-910RBQ	SK-910RB-4Q
Number of channels	1	
Operating frequency	315MHz	433.92MHz
Memory capacity	15 Transmitter button codes per channel	
Operating voltage	11~24 VAC/VDC	
Current draw	30mA@12VDC	
Relay rating	NO/NC/COM Relay, 10A@24VDC/120VAC	
Dimensions	$3^{1}/_{8}$"x$2^{9}/_{16}$"x1" (80x65x25 mm)	

Features

- Five programmable relay output modes: 4-second momentary, 1-second momentary, toggle, latch,and validity
- Control garage doors, gates, house lights, alarm panels, or other devices via remote
- LED indicates programming options and output modes
- One-button programming - no need to cut jumpers

Accessories

SK-91ERSD
Extended range antenna for 315MHz receivers

SK-93ERSD*
Extended range antenna for 433.92MHz receivers

*Special order item. Please contact **SECO-LARM**® for details.

Miniature 1-Channel RF Receivers

Model Numbers

SK-910RAQ
3A relay, 11~24 VAC/VDC

SK-910RAVQ
5A Transistor ground, 3~13.8 VDC

Specifications

Model	SK-910RAQ	SK-910RAVQ
Number of channels	1	
Operating frequency	315MHz	
Memory capacity	15 Transmitter button codes per channel	
Operating voltage	11~24 VAC/ VDC	3~13.8 VDC
Current draw	50mA@ 12VDC	15mA@ 12VDC
Output	NO/NC/COM Relay, 3A	Transistor ground, 5A
Dimensions	$3^{3}/_{16}$"x$2^{9}/_{16}$"x$^{3}/_{4}$" (80x65x19 mm)	

Features

- Control garage doors, gates, house lights , alarm panel , or other devices via remote
- LED indicates programming options and output modes
- Small size
- One-button programming - no need to cut jumpers

Accessories

SK-91ERSD
Extended range antenna (SK-910RAQ only)

2-Channel RF Receivers

Model Numbers

SK-910RB2Q
315MHz

SK-910RB2-4Q
433.92MHz

Specifications

Model	SK-910RB2Q	SK-910RB2-4Q
Number of channels	2	
Operating frequency	315MHz	433.92MHz
Memory capacity	15 Transmitter button codes per channel	
Operating voltage	11~24 VAC/VDC	
Current draw	30mA@12VDC, per channel	
Relay rating	NO/NC/COM Relay, 10A@24VDC/120VAC	
Dimensions	$3^{1}/_{8}$"x$2^{5}/_{16}$"x1" (80x65x25 mm)	

Features

- Five programmable relay output modes: 4-second momentary, 1-second momentary, toggle, latch,and validity
- Control garage doors, gates, house lights, alarm panels, or other devices via remote
- LED indicates programming options and output modes
- One-button programming - no need to cut jumpers

Accessories

SK-91ERSD
Extended range antenna for 315MHz receivers

SK-93ERSD
Extended range antenna for 433.92MHz receivers

Miniature 2-Channel RF Receiver

Model Number

SK-910RAV2Q
3A Transistor ground, 3~13.8 VDC

Specifications

Model	SK-910RAV2Q
Number of channels	2
Operating frequency	315MHz
Memory capacity	15 Transmitter button codes per channel
Operating voltage	3~13.8 VDC
Current draw	15mA@12VDC per channel
Output	Transistor ground, 3A
Dimensions	$3^{3}/_{16}$"x$2^{9}/_{16}$"x$^{3}/_{4}$" (80x65x19 mm)

Features

- Control garage doors, gates, house lights , alarm panel , or other devices via remote
- LED indicates programming options and output modes
- Small size
- One-button programming - no need to cut jumpers

3-Channel RF Receiver

Model Number

SK-910R3Q
315MHz

Specifications

Number of channels	3
Operating frequency	315MHz
Memory capacity	15 Transmitter button codes per channel
Operating voltage	11~24 VAC/VDC
Current draw	50mA@12VDC per channel
Relay rating	NO/NC/COM Relay, 10A@24VDC/120VAC
Dimensions	$5^{5}/_{16}$"x$3^{15}/_{16}$"x$1^{1}/_{8}$" (135x100x28 mm)

Features

- Four programmable relay output modes: Timed (1~60 seconds), toggle, latch, and validity
- Control garage doors, gates, house lights, alarm panels, or other devices via remote
- LED indicates programming options and output modes
- One-button programming - no need to cut jumpers

Accessory

SK-91ERSD
Extended range antenna for 315MHz receivers

4-Channel RF Receivers

Model Numbers

SK-910R4Q
315MHz

SK-910R4-4Q*
433.92MHz

Specifications

Model	SK-910R4Q	SK-910R4-4Q
Number of channels	4	
Operating frequency	315MHz	433.92MHz
Memory capacity	15 Transmitter button codes per channel	
Operating voltage	11~24 VAC/VDC	
Current draw	45mA@12VDC per channel	
Output	NO/NC/COM Relay, 10A@24VDC/120VAC	
Dimensions	$5^{5}/_{16}$"x$3^{15}/_{16}$"x$1^{1}/_{8}$" (135x100x28 mm)	

Features

- Four programmable relay output modes: Timed (1~60 seconds), toggle, latch, and validity
- Control garage doors, gates, house lights, alarm panels, or other devices via remote
- LED indicates programming options and output modes
- One-button programming - no need to cut jumpers

Accessories

SK-91ERSD
Extended range antenna for 315MHz receivers

SK-93ERSD
Extended range antenna for 433.92MHz receivers

*Special order item. Please contact **SECO-LARM®** for details.

RF Pendant Transmitters

1-Button
2"x1½"x⅝" (50x38x16 mm)

2-Button
2"x1⅝"x½" (50x33x13 mm)

3-Button
2⅜"x1⅜"x⅜" (60x35x15 mm)

4-Button
2⅜"x1⅜"x⅜" (60x35x15 mm)

Model Numbers

1-Button

SK-919TD1S-UP
315MHz, 1-Button, 1-Channel

SK-919TT1S-BU
315MHz, 1-Button, 1-Channel

SK-939TS1S*
433.92MHz, 1-Button, 1-Channel

2-Button

SK-919TD2A-UP
315MHz, 2-Button, 3-Channel

SK-917T2A-UQ
315MHz, 2-Button, 3-Channel

SK-939TS2A-PQ
433.92MHz, 2-Button, 3-Channel

3-Button

SK-919TP3JRUQ
315MHz, 3-Button, 7-Channel

4-Button

SK-919TP4J-NUQ
315MHz, 4-Button, 15-Channel

SK-917TP4J-NUQ
315MHz, 4-Button, 15-Channel

SK-939TS4J-NU*
433.92MHz, 4-Button, 15-Channel

Accessories

SK-915LP
Leather pouch for 1 button transmitters

SK-915BA
12VDC Alkaline battery for pendant transmitters

Features

- Over 68 billion possible codes
- LED Transmission indicator
- Includes 12 VDC alkaline battery
- All transmitters are compatible with all SECO-LARM Receivers

SK-919TT1S-BU Only:

- Coding is done by flipping trinary DIP switches. 59,049 combinations
- Use for "block coding" or simple matching of an existing transmitter

SK-917T2A-UQ Only:

- Patented CODEBUMP™ anti-codegrabbing technology changes the transmitter's code to one of 18 quintillion possible codes every time the transmitter button is pressed

SK-917TP4J-NUQ Only:

- Patented CODEBUMP™ anti-codegrabbing technology changes the transmitter's code to one of 18 quintillion possible codes every time the transmitter button is pressed

OEM/ODM/Private Label Available

FCC Certified

- Convert your product to wireless control
- All products are FCC or CE certified, bring your product to market faster
- Contact SECO-LARM for more info

*Special order item. Please contact **SECO-LARM®** for details.

RF Pendant Transmitters (Family)

1-Button

2-Button

3-Button

4-Button

Features

- Over 68 billion (6.8x1010) possible codes
- LED transmission indicator
- All transmitters are compatible with all SECO-LARM Receivers
- Includes 12VDC Alkaline battery
- Pendant Transmitter Dimensions:

*Special order item. Please contact **SECO-LARM**® for details.

Model Numbers

1-Button

SK-919TP1F-NUQ NEW
315MHz, 1-Button, 1-Channel

SK-939TP1F-NUQ* NEW
433.92MHz, 1-Button, 1-Channel

2-Button

SK-919TP2F-NUQ NEW
315MHz, 2-Button, 3-Channel

SK-939TP2F-NUQ* NEW
433.92MHz, 2-Button, 3-Channel

3-Button

SK-919TP3F-NUQ NEW
315MHz, 3-Button, 7-Channel

SK-939TP3F-NUQ* NEW
433.92MHz, 3-Button, 7-Channel

4-Button

SK-919TP4F-NUQ NEW
315MHz, 4-Button, 15-Channel

SK-939TP4F-NUQ* NEW
433.92MHz, 4-Button, 15-Channel

RF Handheld Transmitters

SK-919TP1H-BUQ

SK-919TP2H-NUQ

SK-919TP4H-NUQ

Features

- Operates up to 500ft
- Over 68 billion (6.8x1010) possible codes
- LED transmission indicator
- Includes two 3VDC lithium batteries
- All transmitters are compatible with all SECO-LARM receivers
- Visor clip and belt clip included. Belt Clip Holster/ Wall Mount Switch also available (Model SK-9HBC)
- Slim-line design: 3½"x2$^{3}/_{16}$"x½" (89x56x12 mm)

Model Numbers

1-Button

SK-919TP1H-BUQ
315MHz, 1-Button, 1-Channel

2-Button

SK-919TP2H-NUQ
315MHz, 2-Button, 3-Channel

4-Button

SK-919TP4H-NUQ
315MHz, 4-Button, 15-Channel

Accessories

X-930-096
3VDC Lithium battery, CR2032

SK-9HBC
Belt-clip holster/ wall-mount bracket for handheld transmitters

Wired 1-Channel RF Transmitters

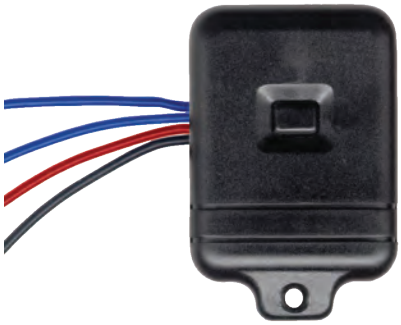

Model Numbers

SK-919TDWS-BU
315MHz

SK-939TDWS-BUQ*
433.92MHz

NEW

Accessories

SK-915BA
12VDC Alkaline battery for pendant transmitters

*Special order item.

Features

- Powered by internal battery or external 12VDC power source
- Use to make almost any security output wireless
- Over 68 billion possible codes
- LED Transmission indicator
- Included 12VDC alkaline battery
- Wiring:
  - Two wires for N.O. switch input
  - Two wires for 12VDC power input
- Dimensions:
  2"x1½"x⅝" (50x38x15 mm)

Alarm Pager System

Model Number

E-37EV
Range: ½ mile (800m)

Accessories

E-37RV
Additional vibrating receiver

E-37ANT
Optional external antenna

Model	E-37EV	
	Transmitter	Receiver
Range	Up to 1/2 mile (800m)	
Operating frequency	27MHz	N/A
Memory capacity	Over 2 million codes	Up to 3 transmitter codes
Operating voltage	12VDC	3VDC (2x AAA batteries)
Current draw	1,000mA (active)	50mA
RF output power	4W max.	N/A
Weight	5.1-oz (145g)	1.6-oz (45g) (without battery)
Dimensions	4⅛"x3⅛"x1 5/16" (105x79x33 mm)	3"x2⅛"x⅝" (75x54x16 mm)

Features

- Monitors up to three zones per premises or vehicle, plus manual paging
- Connect to nearly any type of burglar alarm control panel, vehicle alarm, communications panel, etc.
- One positive and two negative instant trigger inputs
- Range: Up to one half mile (4W output)
- Over two million possible coding combinations
- Code-learning receiver learns up to three transmitters
- Color LEDs (Green, Orange, or Red) on the receiver indicate which zone of the premises or vehicle was triggered
- EEPROM memory stores codes for up to one year without power
- Audible or vibrating page indicator
- Belt-clip receiver included
- Stores the last six pages for easy recall
- Unattended page indicator
- Low battery indicator
- Receiver uses two AAA batteries (not included)
- Extra vibrating receiver available (E-37RV)
- Connect to a CB antenna, car AM radio antenna (adapter cable included), or external antenna (E-37ANT)

Twin Photobeam Detectors

PATENTED

Features

- Twin beams provide reliable perimeter security, minimizing false alarms from falling leaves, etc.
- Lensed optics reinforce beam strength and provide excellent immunity to false alarms due to rain, snow, mist, etc.
- Weatherproof, sunlight-filtering case for indoor and outdoor conditions
- Automatically adjusts beam strength to compensate for different weather conditions
- Automatic input power filtering with special noise rejection circuitry
- NO/NC Alarm output
- N.C. Tamper circuit included
- Non-polarized power inputs
- Built-in laser alignment system for quick, easy installation
- Adjustable interrupt time (50~700 ms)
- "U" Brackets included for pole mounting

E-964-D390Q Only:

- Multi-frequency (four channels selectable) to reduce interference between multiple units for more flexible installation options

Specifications

Model		D90Q	D190Q	D290Q	D390Q
Number of beams		2			
Number of frequencies		1			4
Sensing range	Outdoor	90' (30m)	190' (60m)	290' (90m)	390' (120m)
	Indoor	190' (60m)	390' (120m)	590' (180m)	790' (240m)
Response time		50~700 ms (Programmable)			
LEDs	Green	Good beam signal, properly aligned			
	Yellow	Poor beam signal			
	Red	No beam signal, triggered			
Operating voltage		10~30 VAC/VDC			
Current draw (max.)		64mA@12VDC	70mA@12VDC	74mA@12VDC	88mA@12VDC
Alignment laser		Wavelength: 650nm/Output power: ≤5mW			
Alarm output		NO/NC Relay, 1A@120VAC			
Tamper output		N.C. Switch, 1A@120VAC			
IP Rating		IP55			
Alignment angle		Horizontal: ±90°, Vertical: ±5°			
Operating temperature		-13°~131° F (-25°~55° C)			
Dimensions		$6^{13}/_{16}$"x$2^{15}/_{16}$"x$2^{7}/_{8}$" (173x74x72 mm)			
Weight		2.5-lb (1.1kg)			

Model Numbers

E-960-D90Q
Range: 90ft (30m) outdoor
190ft (60m) indoor

E-960-D190Q
Range: 190ft (60m) outdoor
390ft (120m) indoor

E-960-D290Q
Range: 290ft (90m) outdoor
590ft (180m) indoor

E-964-D390Q
Range: 390ft (120m) outdoor
790ft (240m) indoor

Laser Beam Alignment

Alignment is now easier than ever with our laser beam alignment system.

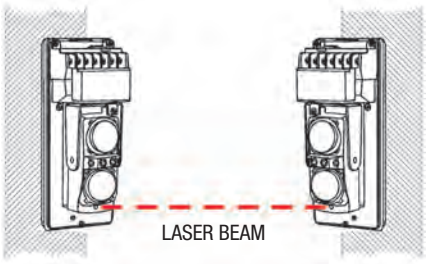

Multi-frequency to reduce interference

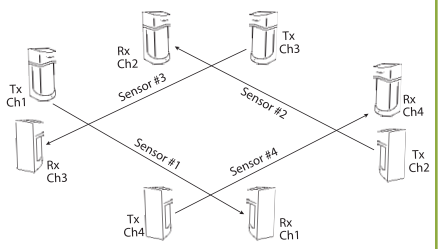

E-964-D390Q

E-960-D90GQ

The E-960-D90GQ is ETL Listed and conforms to UL325-2016.
For details please see page 87

Quad Photobeam Detectors

Features

- Multi-frequency (four channels selectable) to reduce interference between multiple units for more flexible installation options
- Lensed optics reinforce beam strength and provide excellent immunity to false alarms due to rain, snow, mist, etc.
- Weatherproof, sunlight-filtering case for indoor and outdoor conditions
- NO/NC Alarm output
- Built-in heater
- Automatically adjusts beam strength to compensate for different weather conditions
- Automatic input power filtering with special noise rejection circuitry
- N.C. Tamper circuit included
- Non-polarized power inputs
- Built-in laser alignment system for quick, easy installation
- Buzzer sound (beep sound) for beam alignment

Specifications

Model		Q165Q	Q330Q	Q495Q	Q660Q
Number of beams		4			
Number of frequencies		4 (selectable)			
Sensing range	Outdoor	165' (50m)	330' (100m)	495' (150m)	660' (200m)
	Indoor	330' (100m)	660' (200m)	990' (300m)	1,320' (400m)
Response time		50~700 ms (Programmable)			
LEDs	Green	Good beam signal, properly aligned			
	Yellow	Weak signal/Improper alignment			
	Red	No beam signal, triggered			
Operating voltage		12~24 VAC/VDC			
Current draw (max.)		260mA	270mA	280mA	290mA
Alignment laser		Wavelength: 650nm/Output power: ≤5mW			
Alarm output		NO/NC/COM Relay, 1A@125VAC/1A@24VDC			
Tamper output		N.C. Switch, 1A@120VAC			
IP Rating		IP55			
Alignment angle		Horizontal: ±90°, Vertical: ±15°			
Operating temperature		-13°~131° F (-25°~55° C)			
Dimensions		$15^{1}/_{4}$"x$4^{7}/_{16}$"x$4^{11}/_{32}$" (387x113x110 mm)			
Weight		5.7-lb (2.6kg)			

Model Numbers

E-964-Q165Q
Range: 165ft (50m) outdoor
330ft (100m) indoor

E-964-Q330Q
Range: 330ft (100m) outdoor
660ft (200m) indoor

E-964-Q495Q
Range: 495ft (150m) outdoor
990ft (300m) indoor

E-964-Q660Q
Range: 660ft (200m) outdoor
1,320ft (400m) indoor

Laser Beam Alignment

Alignment is now easier than ever with our laser beam alignment system.

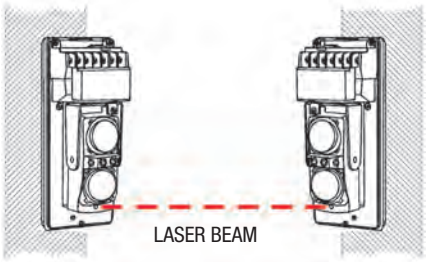

Multi-frequency to reduce interference

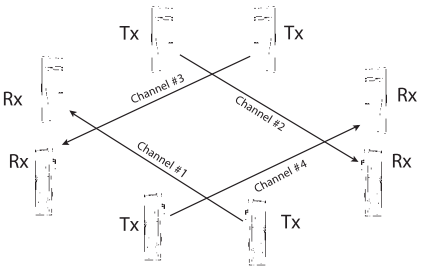

Overview

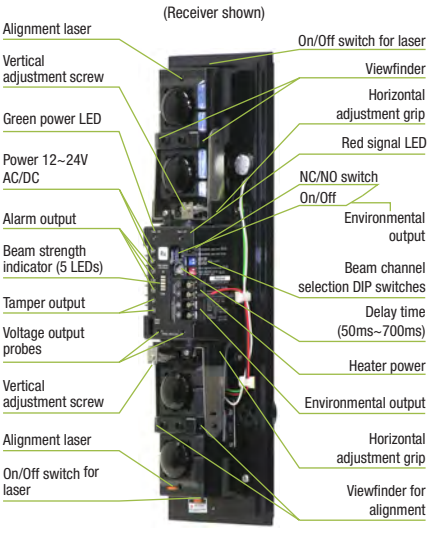

45ft Reflective Beam Sensor

Intertek
Conforms to UL325-2016

UL 325 2016 Compliant

Model Number

E-936-S45RRGQ NEW
Range: 45ft (14m), ETL

Accessories

E-931ACC-BLS6Q
Single-gang, flush-mount bracket

E-931ACC-BLS7Q
L-Bracket for side mounting

E-931ACC-BLS8Q
Wall or door frame bracket

Features

- Typical applications include garage doors, outdoor gates, overhead doors, and manufacturing lines
- Up to 45ft (14m) sensing range
- 10ms Response time
- Pre-wired 6ft (1.8m) cord
- Adjustable sensing range
- Light-On Operation
- 12-30V DC/AC 60Hz, 100mA
- Weatherproof (IP66) construction for indoor and outdoor use
- Sensor, 3" round reflector, sensor hood, and mounting hardware included
- Monitored Output
  - N.C.
  - 10kΩ Resistor

Dimensions

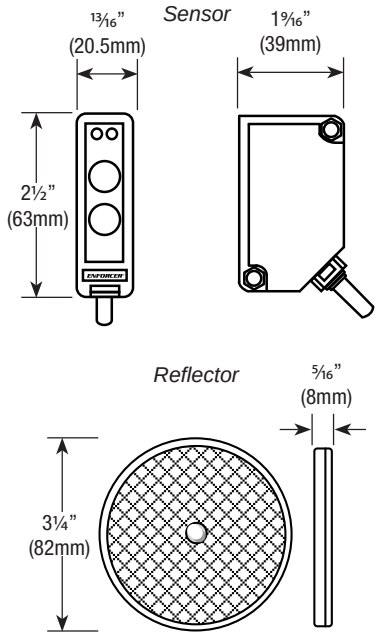

Specifications

Model		E-936-S45RRGQ
Type		Reflective photoelectric beam sensor
Number of beams		1
Sensing range		0.5'~45' (0.1~14 m)
Response time		10 ms
LEDs	Yellow	Good beam signal, properly aligned
	Red	Power
Operating voltage		12-30V DC/AC 60Hz, 100mA
Current draw (max.)		70mA@12VDC
Alarm output		SPDT Relay output (NO/NC/COM), 2A@30VAC/VDC
IP Rating		IP66
Operating temperature		-4°~131° F (-20°~55° C)

Sample Installations

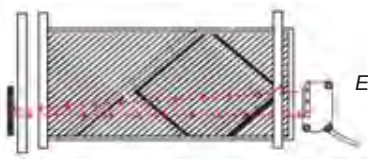

Entry Gate

Store Entrance

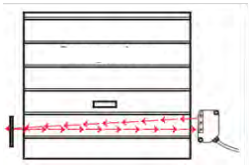

Garage Door

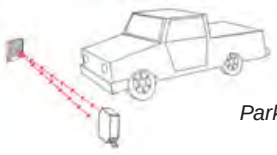

Parking Distance Monitor

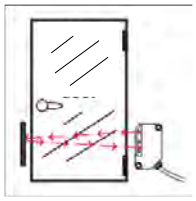

Main Entrance Door

35ft Reflective Beam Sensor

Conforms to UL325-2016

UL 325 2016 Compliant

Features

- Typical applications include garage doors, outdoor gates, or overhead doors
- Up to 35ft (11m) sensing range
- 10ms Response time
- Weatherproof (IP66) construction for indoor and outdoor use
- Pre-wired 6ft (1.8m) cord
- Sensor, 2" square reflector, and mounting hardware include

E-936-S35RRGQ:
- Light-on operation
- 12-30V DC/AC 60Hz, 100mA
- Monitored Output
  - N.C.
  - 10kΩ Resistor

E-931-S35RRQ:
- Dark-on operation
- 12-240 VDC/24-240 VAC, NO/NC output

Specifications

Model		E-936-S35RRGQ	E-931-S35RRQ
Type		Retro-Reflective photoelectric beam sensor	
Number of beams		1	
Sensing range		0.5'~35' (0.2~11 m)	
Response time		10ms (Max.)	
LEDs	Yellow	Good beam signal, properly aligned	
	Red	Power on, triggered off	Trigger
Operating voltage		12-30V DC/AC 60Hz, 100mA	12-240 VDC/24-240 VAC
Current draw (max.)		60mA@12VDC, 20mA@24VDC	40mA@12VDC, 20mA@24VDC
Alarm output		SPDT Relay output (NO/NC/COM), 2A@30 VAC/VDC	SPDT Relay output (NO/NC/COM), 2A@30VDC/1A@250VAC
IP Rating		IP66	
Operating temperature		-4°~131° F (-20°~55° C)	

Sample Installations

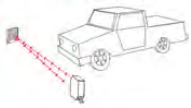

Parking Distance Monitor

Store Entrance

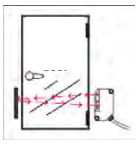

Main Entrance Door

Entry Gate

Garage Door

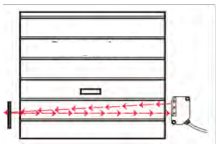

*E-936-S35RRGQ only.

Model Number

NEW

E-936-S35RRGQ*
Range: 35ft (11m), ETL

E-931-S35RRQ
Range: 35ft (11m)

Accessories

E-931ACC-HR1Q
Hood for E-931ACC-RC1Q

E-931ACC-RC1Q
3" (76mm) Round reflector

E-931ACC-BLS6Q
Single-gang, flush-mount bracket

E-931ACC-BLS7Q
L-Bracket for side mounting

E-931ACC-BLS8Q
Wall or door frame bracket

Dimensions

Sensor

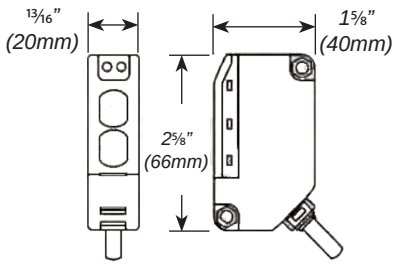

Reflector

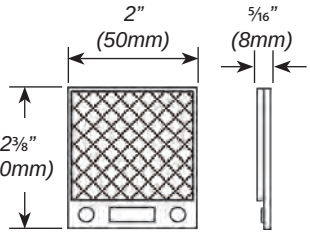

50ft Reflective Beam Sensor

Conforms to UL325-2016

UL 325 2016 Compliant

Model Number

E-931-S50RRGQ NEW
Range: 50ft (15m), ETL

Accessory

E-931ACC-HR1Q
Hood for E-931ACC-RC1Q

Specifications

Number of beams		1
Sensing range		50ft (15m)
Response time		10ms
LEDs	Solid green	Good beam signal, properly aligned
	Alternating flash	Poor beam signal
	Solid red	No beam signal, triggered
Operating voltage		12-30V DC/AC 60Hz, 100mA
Current draw (max.)		55mA@12VDC, 40mA@24VDC
Alarm output		SPDT Relay output, 500mA@30 VAC/VDC
Tamper output		N.C. Switch, 500mA@30 VAC/VDC

Features

- Typical applications include: Garage doors, outdoor gates, or overhead doors
- Housing designed to prevent condensation
- Up to 50ft (15m) sensing range
- 10ms Response time
- Tamper output will trigger an alarm if the sensor's cover is removed
- 12-30V DC/AC 60Hz, 100mA
- Light-On Operation
- Weatherproof (IP55) construction for indoor/outdoor use
- Sensor, 3-inch round reflector, reflector and sensor hood, and mounting hardware included
- Terminal block wiring for added convenience
- Monitored Output
  - N.C.
  - 10kΩ Resistor

33ft Polarized Reflective Beam Sensor

UL 325 2016 Compliant

Non-Polarized Sensor:

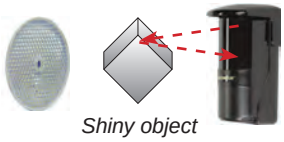

Shiny object

Conforms to UL325-2016

Non-polarized sensor is **NOT** triggered by shiny object which reflects beam but changes polarization.

Polarized Sensor:

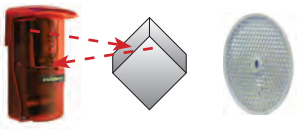

Polarized sensor **IS** triggered by shiny object due to detection of changed polarization of beam.

Model Number

E-931-S33PRGQ NEW
Range: 33ft (10m), ETL

Accessory

E-931ACC-HR1Q
Hood for E-931ACC-RC1Q

Specifications

Number of beams		1
Sensing range		33ft (10m)
Response time		10ms
LEDs	Green	Good beam signal, properly aligned
	Red	No beam signal, triggered
Operating voltage		12-30V DC/AC 60Hz, 100mA
Current draw (max.)		55mA@12VDC, 40mA@24VDC
Alarm output		SPDT Relay output, 500mA@30 VAC/VDC
Tamper output		N.C. Switch, 500mA@30 VAC/VDC

Features

- Typical applications include garage doors, outdoor gates, or overhead doors
- Polarized sensor is immune to shiny objects, triggers when correctly reflected light is detected
- Tamper output will trigger an alarm if the sensor's cover is removed
- Weatherproof (IP55) construction for indoor and outdoor use
- Light-On Operation
- Housing designed to prevent condensation
- 10ms Response time
- Terminal block wiring for added convenience
- Sensor, 3" round reflector, sensor hood, and mounting hardware included
- Monitored Output
  - N.C.
  - 10kΩ Resistor

Twin Photobeam Detector

Conforms to UL325-2016

UL 325 2016 Compliant

PATENTED

Model Number

NEW

E-960-D90GQ
Range: 90ft (30m) outdoor
190ft (60m) indoor, ETL

Laser Beam Alignment

Alignment is now easier than ever with our laser beam alignment system.

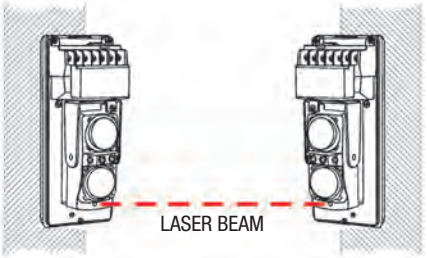

Dimensions

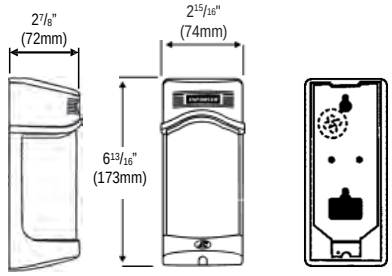

Features

- Twin beams provide reliable perimeter security, minimizing false alarms from falling leaves, etc.
- Lensed optics reinforce beam strength and provide excellent immunity to false alarms due to rain, snow, mist, etc.
- Weatherproof, sunlight-filtering case for indoor and outdoor conditions
- Automatically adjusts beam strength to compensate for different weather conditions
- Light-On Operation
- Automatic input power filtering with special noise rejection circuitry
- NO/NC Alarm output
- N.C. Tamper circuit included
- Non-polarized power inputs
- Built-in laser alignment system for quick, easy installation
- Adjustable interrupt time (50~700 ms)
- "U" Brackets included for pole mounting
- Monitored Output
  - N.C.
  - 10kΩ Resistor

Specifications

Model		E-960-D90GQ
Max Range	Outdoor	90' (30m)
	Indoor	190' (60m)
Current (Max)		150mA
Power		12-30V DC/AC 60Hz, 200mA (non-polarized)
Interrupt speed		10ms
Trigger output		SPDT NO/NC/COM relay, 1A@30 VAC/VDC
Tamper output		N.C. switch, 1A@30 VAC/VDC
LEDs	Red	ON indicates transmitter and receiver not aligned or bream is broken
	Yellow	On indicates weak receiver signal or beam is broken
	Green	ON indicates unit connected to power
Laser wavelength		650nm
Laser output power		<5mW
Alignment angle		Horizontal: ±90°, vertical: ±5°
Operating temperature		-13°~131° F (-25°~55° C)
Weight		2.5-lb (1.1kg)

ETL UL 325-2016 Compliant Sensors

E-931-S35RRGQ *Up to 35ft (11m)*

For more information see pg. 85

E-936-S45RRGQ *Up to 45ft (14m)*

For more information see pg. 84

E-931-S33PRGQ *Up to 33ft (10m)*

For more information see pg. 86

E-931-S50RRGQ *Up to 50ft (15m)*

For more information see pg. 86

50ft Large Reflective Beam Sensor

Model Number

E-931-S50RRLQ
Range: 50ft (15m)

Specifications

Number of beams		1
Sensing range		50ft (15m)
Response time		50~700 ms (Programmable)
LEDs	Green	Power
	Yellow	Poor beam signal
	Red	No beam signal, triggered
Operating voltage		12~250 VAC/VDC
Current draw (max.)		100mA@12VDC
Alarm output		NO/NC Relay, 0.5A@120VAC, min. 1s
Tamper output		N.C. Switch, 0.5A@30VDC
IP Rating		IP55
Alignment angle		Horizontal: ±90°, Vertical: ±5°
Operating temperature		-13°~131° F (-25°~55° C)

Features

- Typical applications include: Garage doors, outdoor gates, overhead doors, or manufacturing lines
- Large sensor with patented design and large reflector for a large sensing area and easier alignment
- Up to 50ft (15m) sensing range
- Response time adjustable from 50~700 ms
- 12~250 VAC/VDC Operation
- Tamper output will trigger an alarm if the sensor's cover is removed
- Weatherproof construction for indoor/outdoor use (IP55)
- Sensor, large reflector, sensor and reflector hoods, and mounting hardware included
- Terminal block wiring for added convenience

Miniature Single Photobeam Sensors

E-961-S50TB

E-964-S50TB

Model Numbers

E-961-S50TB NEW
Range: 50ft (15m)

E-964-S50TB NEW
Range: 50ft (15m) Multi-Frequency

Specifications

Model		E-961-S50TB	E-964-S50TB
Range		Up to 50ft (15m)	
No. of Beam Channels		Single infrared beam	
No. of Beam Frequencies		N/A	4
Input Power		10~24VDC	
Current draw	Tx	15mA@12VDC	
	Rx	30mA@12VDC	
Infrared LED Wavelength		940nm	
Relay Output		NO/NC relay (set by jumper), 0.5A@30VAC/VDC	
Interrupt Speed		50ms	
LED Indicators		Power, Signal Strength, Triggered	

Features

- Built-in AGC control to filter out lighting disturbances
- Sensor range up to 50ft (15m)
- LED indicators for power, signal strength, and trigger
- Small size for a less conspicuous installation
- Signal strength indicator for easier alignment
- Dimensions 3"x1$^{15}/_{16}$"x1$^{3}/_{16}$" (76x48x30 mm)
- Simple to install
- Weatherproof for indoor or outdoor use (IP65)
- Mounting hardware included

E-964-S50TB Only:

- Four selectable beam frequencies to reduce interference
- Dimensions 3$^{11}/_{16}$"x2$^{3}/_{8}$"x1$^{13}/_{16}$" (94x60x46 mm)

Single Photobeam Detector

Features

- 100ft (30m) Sensing distance protecting wide openings or doorways
- Weatherproof (IP66) construction for indoor and outdoor use
- Mounts flat or at a 90° angle to the wall with no need for extra brackets
- Transmitter power can be adjusted to match local environment
- 1 Amp relay output (NO/NC/COM)
- Removable terminal block for easy wiring
- Mounting screws and cable glands included

Model Number

E-961-S90WQ
Range: 100ft (30m)

Specifications

Number of beams		1
Sensing range		100' (30m)
Response time		100ms
Operating voltage		10~24 VAC/VDC
Current draw (max.)	Transmitter	34mA
	Receiver	13mA
Alarm output		1A@120VAC
Alignment angle		Horizontal: ±5°, Vertical: ±5°
Dimensions		3½"x2⅜"x1½" (87x60x39 mm)

Flush-Mount Photobeam Detectors

E-932-D33TBQ

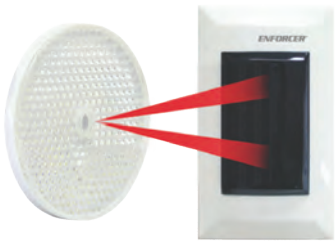

E-932-S16RRQ

Features

- Typical applications include entrances, hallways, or rooms in offices or homes
- Attractive flush-mount design fits unobtrusively into the decor of most offices, retail shops, or homes
- Fits a single-gang box
- Alignment LEDs make installation and setup quick and easy
- Adjustable alignment angle ±15° horizontally/vertically
- Compact size: 4¾"x2¾"x1½" (120x70x38 mm)

Model Numbers

E-932-D33TBQ
Range: 33ft (10m)

E-932-S16RRQ
Range: 16ft (5m)

Specifications

Model	E-932-D33TBQ	E-932-S16RRQ
# Of beams	2	1
Sensing range	33' (10m)	16' (5m)
Response time	10ms	
Operating voltage	12~18VDC	
Current draw (max.)	50mA	
Alarm output	1A@120VAC/VDC	
Alignment angle	Horizontal: ±15°, Vertical: ±15°	

IR Proximity Sensor

Features

- Triggers when device is removed from or entered into detection range
- Place objects on sensor. Sensor triggers when object is removed
- Adjustable output time (1~20 s) or toggle mode
- N.O. or N.C. Operation
- Adjustable sensing range 2"~6" (5~15 cm)
- Relay: 1A@30VDC
- 12~24VDC Operation

Model Number

CS-PD115-PAQ

Specifications

Sensing range		2"~6" (5~15 cm)
LEDs	Red	Standby
	Green	Triggered
Alarm output		1A@30VDC
Output time		1~20 s or Toggle
Operating voltage		12~24 VDC
Current draw		30mA@12VDC
Operating life		100,000 Hours or 1,000,000 uses
Dimensions		1⅜"x⅞"x⅞" (35x23x23 mm)

Curtain Sensors

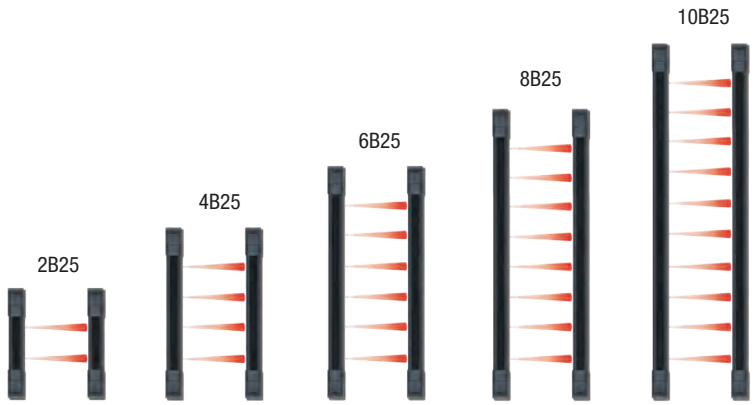

Features

- 50' Indoor, 25' Outdoor
- Multi-frequency to reduce interference between multiple units
- Install on windows, doorways, skylights, fence tops, and any place where space is limited
- Perfect for indoor and outdoor perimeter security
- Slimline design – $1^{5}/_{16}$"x$^{7}/_{8}$" (33x22 mm)
- Rugged aluminum construction
- NO/NC Relay output
- No synchronizing wires required
- 2, 4, 6, 8, or 10 separate photoelectric beam sensors; programmable trigger upon breaking of any single beam or simultaneous breaking of any two adjacent beams
- Anti-tamper circuit for use when power is cut or end cap is removed
- LED alignment indicator
- L-brackets and mounting hardware included

Model Numbers

E-9611-2B25
2 Beams, 11¼" (29cm) long, black

E-9622-4B25
4 Beams, 22½" (57cm) long, black

E-9622-4W25
4 Beams, 22½" (57cm) long, white

E-9644-6B25
6 Beams, 44½" (113cm) long, black

E-9644-6W25
6 Beams, 44½" (113cm) long, white

E-9660-8B25
8 Beams, 60⅛" (153cm) long, black

E-9680-10B25
10 Beams, 79" (201cm) long, black

Applications

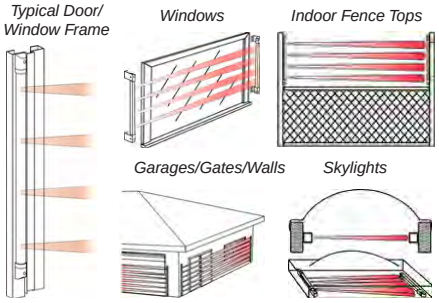

Long-Range Barrier Sensors

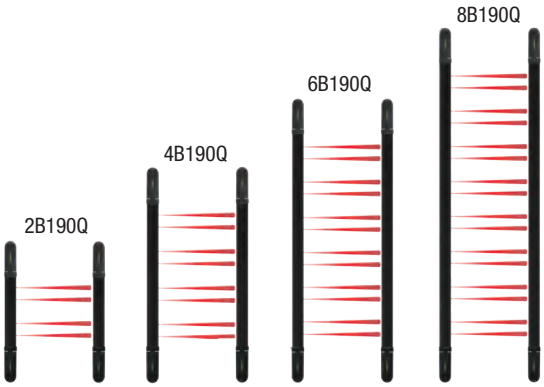

Features

- Long sensor range up to 190ft (60m) outdoors, 380ft (120m) indoors
- Programmable response time (150/300/450/600 ms)
- Built-in heater (activates at 41°F (5°C))
- LED and buzzer alignment indicators
- For indoor or outdoor perimeter security
- Programmable immediate trigger on simultaneous breaking of beams, or trigger after a single pair of beams is broken for at least 2 seconds
- Programmable for 4 different frequencies to reduce interference between multiple units
- Built-in tamper switches
- No synchronizing wires required for alignment
- Form C relay output
- Terminal block wiring
- AGC (Auto Gain Control) Circuits regulate beams to ensure operation in rain, fog, and low-temperature

Model Numbers

E-9626-2B190Q
2 Beam pairs, 26" (66cm) long

E-9643-4B190Q
4 Beam pairs, 43" (109cm) long

E-9661-6B190Q
6 Beam pairs, 61" (155cm) long

E-9679-8B190Q
8 Beam pairs, 79" (201cm) long

Swivel Housing

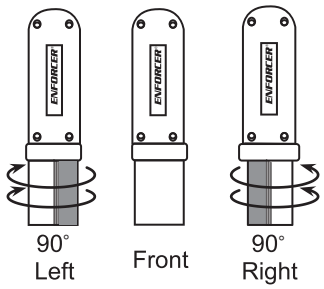

Each sensor is built with a swivel housing for flexible installations and simple alignment. To use, twist the beams up to 90°.

Loop Detector

Model Number

NEW

LD-1123-PQ
12~24 VAC/VDC

Connections

1.	Power	7.	Loop
2.	Power	8.	Loop
3.	Relay 2 (NO)	9.	Ground
4.	Relay 2 (COM)	10.	Relay 1 (NC)
5.	Relay 1 (NO)	11.	Relay 2 (NC)
6.	Relay 1 (COM)		

Features

- Single loop input
- 7 adjustable sensitivity settings
- 2 relays: presence or pulse/fault
- 11-pin connector
- Power-on automatic reset and manual reset functions available
- Auto sensitivity boost when vehicle detected (selectable)
- ABS / Aluminum housing
- Tunable operation frequency
- Two presence modes: limited or permanent
- Dimensions: $3^1/_8$"x$3^1/_{16}$"x$1^1/_2$" (80x78x39 mm)

Occupancy Notification System

Sensor

Notification LED

Model Number

NEW

ON-R100-KM1Q
Occupancy Notification System

Application

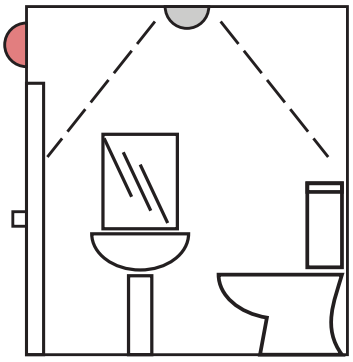

Features

- Monitor up to 2 rooms. (bathroom, storage room, changing room, small conference room, private office, hallway, computer room, dental exam room, dog house, barn, etc.)
- When used for bathroom occupancy, can:
  - Reduce traffic jams and waiting time
  - Increase privacy – no more knocking to check
- Monitor use time – know when someone has been using a room for too long
- Detects occupancy via PIR, light, or both
- Redirect traffic when a monitored room is in use
- Simple enough for DIY installation
- Each transmitter can be monitored by an unlimited number of receivers
- Choose from 2-Ch desk/wall mount receiver or 1-ch wall mount receiver
- Power: 5~12 VDC. Micro USB or terminal block

Voice Dialer

Features

- Trigger-activated alarm and dialer with user-programmable 20-second alarm message
- 16-Digit large display with date/time and function icons
- 3 Triggers (1 N.C., 2 NO/NC) for multiple zone security
- Call in at any time to listen-in to room, broadcast to room, arm, and disarm dialer
- Listen-in, broadcast messages to room, and/or disarm during dialer call out
- Programmable PIN number and entry delay timing
- Wall mountable
- 5 Programmable emergency telephone numbers (up to 32 digits each)
- Home mode function (acts as a door chime when user is at home)
- Panic button
- Built-in flash memory to protect against system data loss in case of power failure
- 9V battery backup (battery not included)
- DC power input jack (power adapter not included)
- Built-in 105dB alarm (programmable ON/OFF)
- Built-in auxiliary output for external alarm or siren
- Built-in line seizure

Model Number

E-921CPQ
Voice dialer with listen-in

Specifications

Operating voltage		9~12 VDC
Current draw	Standby	5mA
	Dialing	20mA
	Alarm ON	150mA
	Relay ON	50mA
	Speaker ON	250mA
	Total	480mA
Voice message length		Up to 20s
Programmable emergency numbers		5
Backup battery type/life (not included)		9VDC/≈20h
Alarm sound level		≥105dB
Trigger input timer		≥500ms
Aux. output current (max)		125mA
Operating temperature		32~104° F (0~40° C)
Weight		11.15-oz (316g)
Dimensions		6 1/16"x4 1/16"x1 1/2" (170x119x38 mm)

Auto Dialer

Features

- 16-Digit large display with date/time and function icons
- 2 (N.C.) Triggers for multiple zone security
- Remote monitoring – user can call in to listen in to room sounds and arm/disarm dialer
- Remotely listen in to room sounds or disarm during call back
- Programmable PIN number and entry delay timing
- 5 Programmable emergency telephone numbers (up to 32 digits each)
- Wall-mountable
- Programmable auto-dialing cycle repeat times
- Home mode function (acts as a door chime when user is at home)
- Panic button
- Built-in flash memory to protect against system data loss in case of power failure
- 9V battery backup (battery not included)
- DC power input jack (3.5mm phone jack, not included)
- Built-in 105dB alarm (programmable ON/OFF)
- Built-in auxiliary output for external alarm or siren

Model Number

E-921APQ
Basic auto dialer

Specifications

Operating voltage		9~12 VDC
Current draw	Standby	5mA
	Dialing	10mA
	Alarm ON	180mA
	Total	310mA
Programmable emergency numbers		5
Backup battery type/life (not included)		9VDC/≈20h
Alarm sound level		≥105dB
Trigger inputs		2x N.C. Triggers
Trigger input timer		≥500ms
Aux. output current (max)		125mA
Operating temperature		32~104° F (0~40° C)
Weight		6.2-oz (175g)
Dimensions		3 3/8"x4 5/16"x1 7/8" (86x110x47 mm)

Alarm Control Panel

Model Number

ENFORCER 295
Five separate zone inputs, Five zone shunting switches, Three adjustable timers, Nine status LEDs, Two alert signals, Four outputs

Features

- 5 Separate zone inputs
  - N.O. or N.C. (selectable) Instant zone with exit delay
  - N.C. Instant zone with exit delay
  - N.C. Delay zone with entry and exit delays
  - N.O. 24-Hour panic zone with no entry and exit delays
  - N.C. 24-Hour tamper zone instant trigger no delay
- 5 Zone shunting switches correspond to the five zone inputs; shunt out any zone that is not working properly to prevent false alarms
- Works on 16VAC/VDC with back-up battery input
- 2 Alert signals for entry and exit delay
- 3 Adjustable timers
  - Adjustable entry delay timer (1~45 sec)
  - Adjustable exit delay timer (1~45 sec)
  - Adjustable alarm duration timer (3s to 20min)
- 9 Status LEDs
- Patented Automatic Extended Exit Delay (AEED): Opening a switch/sensor connected to an exit delay zone before the exit delay elapses automatically extends the exit delay for as long as the switch/sensor remains open
- Phase-II continual protection: To assure continuous protection, any input that remains triggered after the alarm duration has elapsed will shut down. All other inputs will remain armed
- All 9 status LEDs visible when cabinet is closed
- Tamper output: Sends a 100mA transistor ground signal for as long as the tamper zone is activated
- Dry relay contact panic output (C. - N.O.): Relay contacts close when the panic zone is activated
- Positive voltage (3A) relay alarm output: Powers signaling devices like a siren, bell, dialer, etc.
- Regulated power supply and recharger
- Heavy-duty, beige-colored steel cabinet;
- Dimensions: 8½"x3⅛"x11⁷⁄₁₆" (215x79x290 mm)

Audio Discriminator

Model Number

ENFORCER 190
Range: Up to 45ft (14m) front, Up to 25ft (8m) sides

LED Make the Difference

LED Color	Function
Yellow	Indicates whether environmental noise is too high, reducing the likelihood of false alarms
Red	Indicates whether the sensor has been triggered and is sending a signal to the alarm

Protection Pattern

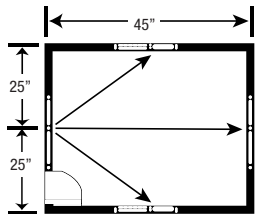

Features

- Eliminates the need for unsightly individual detectors on each pane of glass
- Detects the high-frequency sound of glass breaking
- Patented yellow turbulence LED allows quick and simple sensitivity adjustment without having to use a test meter
- Red LED shows alarm output status
- Wide detection radius
  - 25ft (8m) if ceiling-mounted
  - 34ft (10m) if wall-mounted
- Equipped with an N.C. tamper circuit to protect against opening or breaking the case
- Installs without RF-shielded cable
- Compact size and attractive appearance allows for discreet installations anywhere

Xenon Tube Strobe Lights

SECURITY UL LISTED
SL-126Q Only

Features

- For "informative" general signaling requirements
- Incorrect polarity cannot damage circuit or draw current
- Easy 2-wire installation, regardless of voltage. Also, if the strobe light is being powered by a battery, as the battery is drained the strobe light will continue to function
- Low current consumption with long operating lifespan of over 300 continuous hours (2,000,000 flashes)
- Includes choice of amber, blue, clear, green, or red lens
- Lens is made of high-impact resistant acrylic, case of high-impact resistant ABS plastic.
- The SECO-LARM strobe light comes with a protective inner cover. This protects the high-voltage xenon tube when the colored lens has been removed

Specifications

Model	SL-126Q	SL-126-A24Q
Operating voltage	6~12 VDC	6~24 VDC
Current draw	200mA@12VDC	150mA@24VDC
Flash rate	90/min@12VDC	100/min@24VDC
Brightness	100,000 Candle power	
Electrical protection	Reverse-polarity protected	
Operating life	Over 300 continuous hours (2,000,000 flashes)	
Operating temperature	-22°~140° F (-30°~60° C)	
Base	High-impact black ABS	
Lens	High-impact acrylic	
Dimensions	$3^{15}/_{16}$"x$2^{29}/_{32}$" (100x74mm)	

Ordering Information

Color	SL-126Q	SL-126-A24Q	Replacement Lens
Amber	SL-126Q/A	SL-126-A24Q/A	SL-126LQ/A
Blue	SL-126Q/B	SL-126-A24Q/B	SL-126LQ/B
Clear	SL-126Q/C	SL-126-A24Q/C	SL-126LQ/C
Green	SL-126Q/G	SL-126-A24Q/G	SL-126LQ/G
Red	SL-126Q/R	SL-126-A24Q/R	SL-126LQ/R

*SL-126-A24Q is not UL listed

Model Numbers

SL-126Q
12VDC Operation, UL listed

SL-126-A24Q*
24VDC Operation

Accessories

SL-126LQ/x
Replacement Lens
- SL-126LQ/A – Amber
- SL-126LQ/B – Blue
- SL-126LQ/C – Clear
- SL-126LQ/G – Green
- SL-126LQ/R – Red

SL-1901-DAQ
Conduit drop bracket, can be used with SL-1901-JAQ

SL-1901-JAQ
Conduit box bracket, can be used with SL-1901-DAQ

Optional Conduit Mounting Brackets

- The conduit box and conduit drop bracket are interchangeable
- Compatible with all SL-126 and SL-1301 Series strobe lights

Conduit drop bracket only

Conduit box only

Conduit drop bracket with conduit box

Protective Inner Cover

The SECO-LARM strobe light comes with a protective inner cover. This protects the high-voltage xenon tube when the colored lens has been removed.

LED Strobe Lights

LED

Features

- Utilizes high-intensity LEDs
- Operating life over 50,000 hours (over 5.7 years)
- Same size as the SL-126Q strobe light
- 12 LEDs
- Simple 2-wire installation
- Weather resistant (IP66)
- High-impact resistant case
- High-impact and heat-resistant lens
- Reverse polarity protection
- Visible in all directions
- 5 lens colors available: Amber, Blue, Clear, Green and Red

BAQ series also includes all features of the EAQ plus:

- 5 Vertical LED strips (32 LEDs total) increase visibility from various directions
- 6 different flashing options
- Adjustable flashing speed
- Backup battery available for continuous lighting application

SAQ series also includes all features of the BAQ plus:

- 10 Vertical LED strips (54 LEDs total)
- Built-in 100dB siren (programmable)
- IP55

Specifications

Model	SL-1301-EAQ	SL-1301-BAQ	SL-1301-SAQ
Operating voltage	6~12 VDC	9~12VDC, 12 VAC	10~24 VAC/VDC
Current draw (max)	200mA	350mA	550mA
# Of flash patterns	1	6	6
Flashing speed	130 times/min	Adjustable 30~260 times/min	
Vertical LED strips	0	5	10
Total # of LEDs	12	32	54
Backup battery	No	Yes	
Operating temperature	-4°~144° F (-20°~65° C)		
Electrical protection	Reverse polarity protected		
Built-in siren	No		Yes (100dB)
IP rating	IP66		IP55
Dimensions	$3^{15}/_{16}$"x$2^{29}/_{32}$" (100x74mm)		

Ordering Information

Color	SL-1301-EAQ (12 LED)	SL-1301-BAQ (32 LED)	SL-1301-SAQ (54 LED)
Amber	SL-1301-EAQ/A	SL-1301-BAQ/A	SL-1301-SAQ/A
Blue	SL-1301-EAQ/B	SL-1301-BAQ/B	SL-1301-SAQ/B
Clear	SL-1301-EAQ/C	SL-1301-BAQ/C	SL-1301-SAQ/C
Green	SL-1301-EAQ/G	SL-1301-BAQ/G	SL-1301-SAQ/G
Red	SL-1301-EAQ/R	SL-1301-BAQ/R	SL-1301-SAQ/R

Model Numbers

NEW

SL-1301-EAQ
12 LEDs, 6~12 VDC

SL-1301-BAQ
32 LEDs, 9~12 VDC, 12VAC

NEW

SL-1301-SAQ
54 LEDs, 10~24 VAC/VDC, siren

Flashing Patterns

Description	Top View
Strobe LEDs flash on and off continuously. (Default setting)	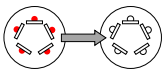
Rotate Clockwise Light rotates clockwise in a circular fashion continuously. (Beacon)	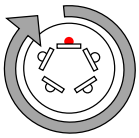
Steady ON All LEDs stay on. Ideal for continuous lighting applications.	
Flash with Progressive ON LEDs turn on progressively clockwise until all LEDs are lit (sweep), and then turn off.	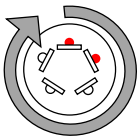
Rotate Back and Forth LED groups light up one at a time, rotating clockwise and counterclockwise.	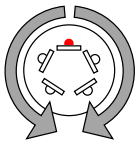
Flash with Progressive ON/OFF LEDs turn on progressively clockwise (sweep), then turn off progressively counterclockwise.	

Accessories

SL-126LQ/x
Replacement Lens

- SL-126LQ/A – Amber
- SL-126LQ/B – Blue
- SL-126LQ/C – Clear
- SL-126LQ/G – Green
- SL-126LQ/R – Red

SL-1901-DAQ
Conduit drop bracket, can be used with SL-1901-JAQ

SL-1901-JAQ
Conduit box bracket, can be used with SL-1901-DAQ

See page 94 for more information

Mini Strobe Sirens

LED

Model Numbers	
SL-1312-SA/B	*Blue lens* NEW
SL-1312-SA/R	*Red lens* NEW

Features

- Synchronized piezo siren and long operating life LED
- Use single-gang box or surface-mount
- High-impact plastic casing and weatherproof design
- Simple 2-wire connection
- Alarm siren sound is 110dB@1ft (30cm)
- Operating voltage: 6~15VDC
- Current draw: 90mA@12VDC

High-Intensity LED Strobe Lights

LED

Model Numbers	
SL-1311-MA/A	*Amber*
SL-1311-MA/B	*Blue*
SL-1311-MA/C	*Clear*
SL-1311-MA/R	*Red*

Features

- Weatherproof (IP66) and vibration resistant for indoor and outdoor use
- Surface or flush mount
- Up to 15 units can be synchronized to flash simultaneously or alternately
- 19 Built-in programmable flash patterns
- Operation life of over 100,000 hours
- Operating voltage: 10~30VDC

Wire Guards

WG-SD1Q

WG-SL1Q

Model Numbers	
WG-SD1Q	*Smoke Detector* NEW
WG-SL1Q	*Strobe Light* NEW

Features

- Protects against vandalism and accidental damage
- Easy removal for cleaning and maintenance
- 9-gauge steel wire coated with corrosion resistant polyester plastic
- Welded at all points for strength
- Mounting hardware included
- Dimensions:
  - WG-SD1Q: $8\frac{7}{8}$"x$3\frac{1}{4}$" (733x83 mm)
  - WG-SL1Q: $5\frac{1}{4}$"x$3\frac{3}{4}$"(133x95 mm)

Siren and Buzzers

SH-532L

SH-504Q

SH-506Q

Model Numbers	
SH-532L	*3 Tone Siren*
SH-504Q	*Miniature buzzer, plate/surface mount*
SH-506Q	*Miniature buzzer, surface mount* NEW

Features

SH-532L:
- 3 Tones, 124dB
- Black ABS plastic trumpet
- Miniature size, just 3¼" long with 3½" diameter (83x89 mm)
- Low current drain of 1A@12VDC

SH-504Q:
- Miniature 91dB electronic buzzer
- 5~15 VDC Operation
- Surface mount or mount in ¾" (19mm) "D' hole of alarm panel or remote plate
- Low current drain of 35mA@12VDC

SH-506Q:
- Miniature 93dB electronic buzzer
- 3-28VDC, surface mount
- Low current drain of 35mA@12VDC

High Speed Latching Continuity Tester

Features

- Three testing modes:
  - Real-time
  - Auto-reset
  - Latch mode
- 100µs Sensitivity
- Test N.O. and N.C. circuits
- Verify circuit continuity through beeper or visual indication
- Built-in LED light
- Internal battery included

Model Number

ST-BL01Q
High-Speed Latching Continuity Tester

Specifications

Response time	100µs
Continuity Threshold	3kΩ
Power	9-Volt battery (included)
Dimensions	$4^{3}/_{16}$"3"x$1^{1}/_{16}$" (105x75x27 mm)

Battery Testers

ST-BT02Q

ST-BT03Q

Features

- Performs 6 essential tests in the field:
  - **Continuity Testing**
  - **Voltage Testing**
  - **Load Testing**
  - **Polarity Testing**
  - **Voltage Drop Testing**
  - **PTC Fuse Testing**
- Strength indication LEDs help test Load, Voltage, and PTC Fuses
- Selectable load
- Illuminated power connector
- Overheat indicator
- Alligator clips included

Model Numbers

ST-BT02Q
12VDC Tester

ST-BT03Q
12/24VDC Auto-Sensing Tester

Specifications

Model		ST-BT02Q	ST-BT03Q
Operating voltage		5~12VDC	12/24 VDC (auto sensing)
Simulated load	For 12VDC	0.5A@12VDC and 1A@12VDC	0.5A and 1.0A
	For 24VDC	N/A	0.25A and 0.5A
Power	Continuity	CR1220	2x CR2016
	All other tests	Passive	

Low-Voltage Battery Cut-Off

Features

- Selectable input 12/24VDC
- Adjustable voltage cut-off and restore point
- Master On/Off switch
- Green LED AC power indicator
- Dual-color DC LED indicator
- Includes battery leads and double-sided tape

Model Number

ST-BD01Q
Low-Voltage Battery Cut-Off

Specifications

Relay contact rating		7A@30VDC
LED indicators	AC	Green
	DC	Red: 12VDC
		Blue: 24VDC
Connections	AC input	Terminal block
	AC output	Gray wire leads
	DC	Quick-connect terminal (battery side)
		On-board male spade terminal

Power Supply Chargers

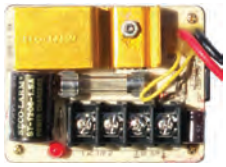
ST-1206-1.5AQ

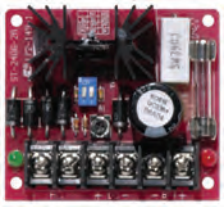
ST-2406-2AQ

ST-2406-3AQ

ST-2406-5AQ

ST-2406-7AQ

ST-2406-10AQ

Model Numbers

ST-1206-1.5AQ
1.5A Continuous, 6/12 VDC

ST-2406-2AQ
2.0A Continuous, 6/12/24 VDC

ST-2406-3AQ
2.5A Continuous, 6/12/24 VDC

ST-2406-5AQ
4A Continuous, 6/12/24 VDC

ST-2406-7AQ
7A Continuous, 6/12/24 VDC

ST-2406-10AQ
9A Continuous, 6/12/24 VDC

Open-Frame Transformers

SECO-LARM offers a full line of Open-Frame Transformers.

See Page 99 for details

Features

- Convert low-voltage AC input power to low-voltage DC output power
- Regulated and filtered output voltage
- Short-circuit protection
- Thermal protection and compensation
- Built-in backup battery charger
- Switches to backup battery automatically in case of power loss
- Fused protection for battery charger
- Two LEDs to indicate AC power input and DC power output status
- Compatible with lead-acid or gel-type rechargeable batteries
- Reverse-polarity protected
- Includes foam tape and battery terminals for easy installation
- For transformer selection information, see below chart, "Transformer Selection Table"

Specifications

Model		ST-1206-1.5AQ	ST-2406-2AQ	ST-2406-3AQ	ST-2406-5AQ	ST-2406-7AQ	ST-2406-10AQ
Output voltage		6/12VDC	6/12/24 VDC				
Current	Continuous	1.5A	2.0A	2.5A	4A	7A	9A
	Peak	2A		3A	5A	7.5A	10A
Current Output (Maximum Charge)	6V	100mA					
	12V	220mA					
	24V	N/A	450mA				
Dimensions		2½"x2¾"x1³⁄₁₆" (64x70x30 mm)		2⅞"x2⅞"x1⅜" (73x73x35 mm)	2⅞"x3"x1⁵⁄₁₆" (73x76x33 mm)	5½"x5⅛"x2¹¹⁄₆₄" (140x130x55 mm)	

Transformer Selection Table

Output voltage	ST-1206-1.5AQ	ST-2406-2AQ	ST-2406-3AQ	ST-2406-5AQ	ST-2406-7AQ	ST-2406-10AQ
6VDC	12VAC/20VA	12VAC/20VA	**ST-UV16-W50Q** 16VAC/50VA	**ST-UV16-W100Q** 16VAC/100VA	**ST-UVDA-W180Q** 24~28VAC/180VA	
12VDC	**ST-UV16-W50Q** 16VAC/50VA		**ST-UVDA-W100Q** 24~28VAC/100VA	**ST-UV16-W100Q** 16VAC/100VA	**ST-UVDA-W180Q** 24~28VAC/180VA	
24VDC	N/A	**ST-UV24-W50Q** 24VAC/50VA	**ST-UVDA-W100Q** 24~28VAC/100VA	**ST-UVDA-W180Q** 24~28VAC/180VA	24-28VAC/210VA	28VAC/350VA

Open-Frame Transformers

ST-UV16-W100Q

Model Numbers

ST-UV16-W50Q
16VAC, 50VA

ST-UV24-W50Q
24VAC, 50VA

ST-UV16-W100Q
16VAC, 100VA

ST-UVDA-W100Q
24/28 VAC, 100VA

ST-UVDA-W180Q
24/28 VAC, 180VA

Features

- Dual-voltage input: 120/240 VAC, 50/60 Hz
- Works with all SECO-LARM power supplies and chargers
- Shielded windings reduce electromagnetic interference

Specifications

Model	ST-UV16-W50Q	ST-UV24-W50Q	ST-UV16-W100Q	ST-UVDA-W100Q		ST-UVDA-W180Q	
Output voltage	16VAC	24VAC	16VAC	24VAC	28VAC	24VAC	28VAC
Current	3.12A	2.08A	6.25A	4.16A	3.57A	7.50A	6.43A
VA	50VA		100VA			180VA	
Input voltage	120/240 VAC, 50/60 Hz						

Power Adapters

ST-UV12-S0.5Q

ST-UV12-S1.0Q

ST-UV12-S2.0Q

ST-UV12-S5.0Q

c UL us LISTED

Model Numbers

ST-UV12-S0.5Q
0.5 Amps

ST-UV12-S1.0Q
1 Amp

ST-UV12-S2.0Q
2 Amps

ST-UV12-S5.0Q
5 Amps

Fits Easily with Power Strip

Features

ST-UV12-S0.5Q, ST-UV12-S1.0Q, and ST-UV12-S2.0Q Only:

- Sideways plug for easy use on power strips
- Universal 100~240 VAC input
- Regulated 12VDC output
- 6ft (1.8m) Cord with 2.1mm plug (positive center)
- Low current drain

ST-UV12-S5.0Q Only:

- Convert AC input power to low-voltage DC output power
- LED Power indicator
- Universal 100~240 VAC input
- Regulated 12VDC output
- 6ft (1.8m) Cord with 2.1mm plug (positive center)
- Includes AC power cord (IEC320-C13)
- Low current drain

Relay Modules

SR-2206-C5AQ

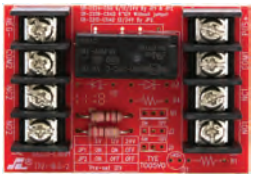
SR-2212-C5AQ

SR-1212-C2ALQ

SR-1212-C7ALQ

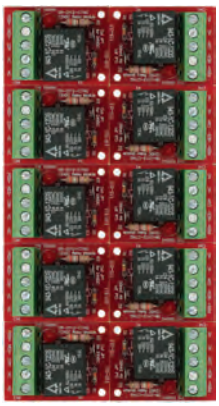
SR-2112-C7AQ/10

Model Numbers

SR-2206-C5AQ
Heavy-duty, 6/12 VDC supply, 6/12 VDC trigger, 5A, DPDT

SR-2212-C5AQ
Heavy-duty, 12/24 VDC supply, 12/24 VDC trigger, 5A, DPDT

SR-1212-C2ALQ
Low-current, high-sensitivity, 12/24 VDC supply, 3~24 VDC trigger, 2A, DPDT

SR-1212-C7ALQ
Heavy-duty, high-sensitivity, 12/24 VDC supply, 3~24 VDC trigger, 7A, Dual SPDT

SR-2112-C7AQ/10
12/24 VDC Supply, 12/24 VDC trigger, 7A, SPDT, sold in pack of 10

Features

- Relay modules for any application where relays are required
- Easy installation
- Easily fits inside alarm panel enclosures
- Screw terminals allow easy installation without soldering or other time consuming connections
- A wide selection of relay modules available: Single or dual relays, low-current or heavy-duty operation, and high-sensitivity or normal sensitivity

SR-2112-C7AQ/10 Only:

- Ships with 10 relay modules on a board
- Each module easily snaps off for individual use

Specifications

Model	SR-2206-C5AQ	SR-2212-C5AQ	SR-1212-C2ALQ	SR-1212-C7ALQ	SR-2112-C7AQ/10
Supply voltage	6/12 VDC	12/24 VDC			
Trigger voltage	6/12 VDC	12/24 VDC	3~24 VDC		12/24 VDC
Voltage selection	Auto-sensing	Jumper	Auto-sensing	Jumper	
Relay type	DPDT			SPDT	
Relay rating	5A		2A	7A	
Number of relays	1			2	1
Current draw	70mA@6VDC 80mA@12VDC	70mA@12/24VDC	15mA@12VDC 18mA@24VDC	60mA@ 12/24VDC	35mA@12VDC 40mA@24VDC
Dimensions	2¾"x1⅞"x¾" (70x48x20 mm)		2¾"x1 15/16"x¾" (70x50x20 mm)	2⅜"x1 9/16"x¾" (60x40x20 mm)	1 9/16"x1 3/16"x¾" (40x30x20 mm)

Installation Overview

SR-2206-C5AQ/SR-2212-C5AQ

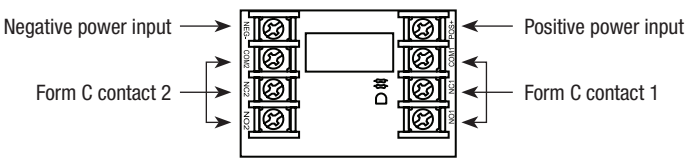

SR-1212-C2ALQ

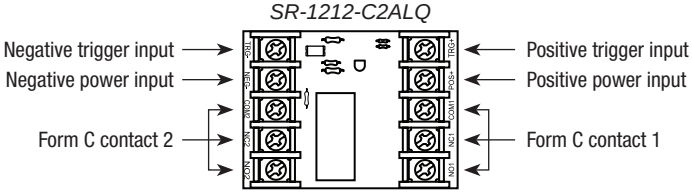

SR-1212-C7ALQ

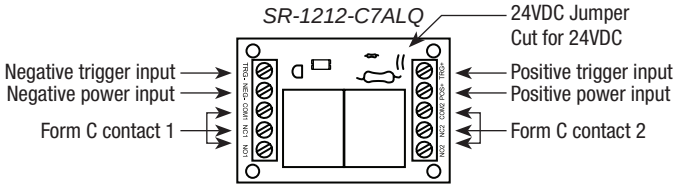

SR-2112-C7AQ/10

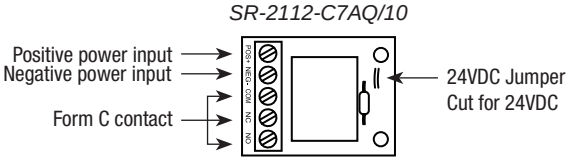

Programmable Timer

Model Number

SA-025Q
Multipurpose timer with case

Features

- Can be triggered via N.O. positive (+) trigger, N.C. negative (-) trigger, or by powering up the unit
- Relay can be programmed to activate at the start or at the end of the timing cycle
- Built-in reset function to manually reset timing cycle
- Timer can be set from 1 sec to 60 min
- Form C relay, contacts rated 8A@120VAC/24VDC
- Programmable for pulse (flash) activation
- Relay can also be set to activate for one second at the end of the timing cycle
- LED indicates relay is energized
- 12VDC/24VDC Operation (auto-sensing)
- Current: 1mA (standby), 50mA (active)
- Board measures 2⅞"x2½" (73x63 mm)
- Functions programmed via DIP switches – no jumpers to cut

Mini Programmable Timer

Model Number

SA-026Q
Mini programmable timer

Features

- Adjustable timer from 1~180 seconds via an onboard potentiometer
- Compact design: $1^{3}/_{16}$"x$2^{9}/_{32}$"x$^{5}/_{8}$" (30x58x16 mm)
- NO/NC Switch trigger
- 12~24 VAC/VDC Operation
- Relay output: Form C (SPDT) via terminal blocks
- Current: 2mA (standby), 75mA (active)
- Contacts rated 3A@24VDC
- Built-in buzzer output (100mA@24VDC)
- Includes double-sided foam tape

Also Available from SECO-LARM®

SA-027WQ
7-Day Timer
See page 23

SA-027HQ
365-Day Annual Timer
See page 23

Switches and Buttons

Tamper Switches

SS-072Q	*For normally closed tamper circuits*
SS-073Q	*For normally open tamper circuits*

- For drawers and alarm boxes
- Silver-plated contacts
- High-impact plastic case
- Screw terminals
- Rated 0.5A@50VDC

SECURITY UL LISTED

Toggle Switches

SS-076Q/GY	*Gray toggle switch*
SS-076Q/SW	*Snow-white toggle switch*

- SPST Toggle switch rated 3A@125VDC
- Attractive plastic case with two screw holes
- Pre-wired 6" (15cm) leads

Momentary Pushbuttons

SS-032Q/RD	*Red N.O. Button*
SS-033Q/BK	*Black N.C. Button*

- Fits ½" (13mm) hole
- Rated 1A@12VDC

SS-032Q/RD SS-033Q/BK

Momentary Pushbuttons

SS-074/BG	*N.O. Push-to-close operation*

- N.O. (Push-to-close) Operation
- Double-button operation virtually eliminates accidental triggering
- Sturdy metal case, silver-plate SPST contacts, pre-wired for quick installation
- Rated 1A@25VDC

Holdup Buttons

SS-077Q	*N.C. Push-to-open operation*
SS-078Q	*N.O. Push-to-close operation*
SS-078-KEYQ	*Spare key for SS-077Q and SS-078Q*

- Latching pushbutton, flag shows when pressed
- High-impact ABS case, stainless steel cover
- SPST Switch rated 1A@12VDC
- Two reset keys included

Vibration/Shock Sensors

SS-040Q/BR	*N.C., Brown*
SS-040Q/W	*N.C., White*

- Detects shock to window glass, walls, or ceilings
- Gold-plated contacts for longer life and reliability
- Built-in tamper switch for complete security
- Adjustable from 1~50g
- 1A@50VDC
- Size: ⅝"x⅞"x2⅜" (16x22x60 mm)

Foil connection block

SS-202Q

SECURITY UL LISTED

Emergency Pushbuttons

SS-075Q	*N.O. "Emergency" button*
SS-075CQ	*NO/NC "Emergency" button*
SS-075C-PEQ	*NO/NC Emergency button kit*

- SPST Contact rated 0.5A@12VDC
- Screw terminals for easy installation
- Large button with printed message on faceplate

SS-075C-PEQ Only

- Includes three stick-on labels ("PUSH TO EXIT", "PRESIONE PARA SALIR", 'EMERGENCY")
- SPST Switch rated 1A@12VDC

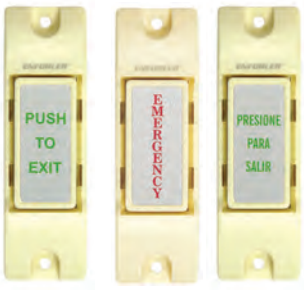

Surface Mount Magnetic Contacts

SM-200Q/BR *Brown, N.C.*	SM-200Q/W *White, N.C.*
• Standard surface mount • Gold and deactivated rhodium plating for longer life and reliability • Screw terminals for quick installation • Includes terminal cover	• For N.C. Circuits • ¾" (19mm) Gap • Dimensions: 2½"x⁹⁄₁₆"x½" (63x14x13 mm)

SM-300Q/BR *Brown, N.O.*	SM-300Q/W *White, N.O.*
• Standard surface mount • Gold and deactivated rhodium plating for longer life and reliability • Screw terminals for quick installation • Includes terminal cover	• For N.O. Circuits • ½" (13mm) Gap • Dimensions: 2½"x⁹⁄₁₆"x½" (63x14x13 mm)

SM-216Q/BR *Brown, N.C.*	SM-216Q/GY *Gray, N.C.*
• Wide-gap surface mount contact for loose-fitting doors and windows • Gold and deactivated rhodium plating for longer life and reliability • Screw terminals for quick installation • Includes spacers	• For N.C. Circuits • 2¾" (70mm) Gap • Dimensions 3¹⁵⁄₁₆"x½"x⁹⁄₁₆" (100x13x14 mm)

SM-217Q/W *White, N.C*

- Miniature wide-gap surface mount for loose-fitting doors and windows
- Gold and deactivated rhodium plating for longer life and reliability
- Wide gap, yet contact is no longer than conventional surface type
- Screw terminals for quick installation
- For N.C. Circuits
- 2" (51mm) Gap
- Dimensions: 2½"x⁹⁄₁₆"x½" (63.5x14x13 mm)

SM-433-TQ/B *Brown, N.C.*	SM-433-TQ/W *White, N.C.*
• Surface mount contact • Gold-plated terminals for longer life and reliability • Cover hides mounting screws, terminal block, and wires	• Screw-mount (mounting screws included) • For N.C. Circuits • 1⁷⁄₃₂" (31mm) Gap • Dimensions: 2"x⁹⁄₁₆"x½" (51x14x13 mm)

Self-Stick Magnetic Contacts

SM-431-TQ/B *Brown, N.C.*

- Miniature surface mount
- Gold-plated terminals for longer life and reliability
- Screw-mount using side flanges, or adhesive mounting (mounting screws and double-sided tape included)

SM-431-TQ/W *White, N.C.*

- Quick-connect terminals
- For N.C. Circuits
- 1" (25mm) Gap
- Dimensions: 2"x⅜"x¼" (51x10x6 mm)

SM-4003-TQ/W *White, N.C*

- Miniature surface mount
- Gold-plated terminals for longer life and reliability
- Adhesive mount (double-sided tape included)
- Quick-connect terminals
- For N.C. Circuits
- 1" (25mm) Gap
- Dimensions: 1½"x⅜"x¼" (38x10x6 mm)

SM-204Q/BR *Brown, N.C.*

- Miniature "flange-type" surface mount
- Gold and deactivated rhodium plating for longer life and reliability
- Screw-mount using flanges, or adhesive mounting (double-sided tape included)
- Flange breaks off for extra miniature size

SM-204Q/W *White, N.C.*

- 15" (38cm) Leads extend from center
- For N.C. Circuits
- 1" (25mm) Gap
- Dimensions: 1⅜"x⅜"x¼" (35x10x6 mm)

SM-205Q/BR *Brown, N.C.*

- Miniature "flange-type" surface mount
- Gold and deactivated rhodium plating for longer life and reliability
- Screw-mount using flanges, or adhesive mounting (double-sided tape included)
- Flange breaks off for extra miniature size

SM-205Q/W *White, N.C.*

- 15" (38cm) Leads extend from side
- For N.C. Circuits
- 1" (25mm) Gap
- Dimensions: 1⅜"x⅜"x¼" (35x10x6 mm)

SM-4004-TQ/W *White, N.C., Terminals*

- Miniature "capsule-type" surface mount
- Gold-plated terminals for longer life and reliability
- Adhesive mounting (double-sided tape included)
- Quick-connect terminals
- For N.C. Circuits
- 1" (25mm) Gap
- Dimensions: 1"x⅜"x¼" (25x10x6 mm)

SM-4004-LQ/W *White, N.C., 18" (46cm) wire leads*

- Miniature "capsule-type" surface mount
- Adhesive mounting (double-sided tape included)
- 18" (46cm) wire leads
- For N.C. Circuits
- ¾" (19mm) Gap
- Dimensions: 1"x⅜"x¼" (25x10x6 mm)

Recessed-Mount Magnetic Contacts

SM-206Q/BR *Brown, N.C.*

- ¼" Press fit
- Gold and deactivated rhodium plating for longer life and reliability
- Unique glue/epoxy compound protects reed switch

SM-206Q/W *White, N.C.*

- 15" (38cm) Wire leads
- For N.C. Circuits
- 1" (25mm) Gap
- Switch dimensions: 1¼"x"¼" (32x6 mm)

SM-207Q/BR *Brown, N.C.*

- ⅜" Press fit
- Gold and deactivated rhodium plating for longer life and reliability
- Unique glue/epoxy compound protects reed switch
- Switch and magnet have ribs for securing in holes

SM-207Q/W *White, N.C.*

- 15" (38 cm) Wire leads
- For N.C. Circuits
- 1" (25mm) Gap
- Switch dimensions: 1⅜"x7⁄16"x⅜" (35x11x10 mm)

SM-207-5Q/BR *Brown, N.C.*

- ⅜" Press fit
- Gold and deactivated rhodium plating for longer life and reliability
- Unique glue/epoxy compound protects reed switch
- Switch and magnet have ribs for securing in holes

SM-207-5Q/W *White, N.C.*

- 15" (38 cm) Wire leads
- For N.C. Circuits
- ⅜" (10mm) Gap
- Switch dimensions: ¾"x7⁄16"x⅜" (19x11x10 mm)

SM-207-5LQ/BR *Brown, N.C.*

- ⅜" Press fit
- Gold and deactivated rhodium plating for longer life and reliability
- Unique glue/epoxy compound protects reed switch
- Switch and magnet have ribs for securing in holes

SM-207-5LQ/W *White, N.C.*

- 15" (38 cm) Wire leads
- For N.C. Circuits
- 1" (25mm) Gap
- Switch dimensions: ¾"x7⁄16"x⅜" (19x11x10 mm)

SM-407-5TQ/W *White, N.C*

- ⅜" Press-fit with stubby magnet
- Gold-plated terminals for longer life and reliability
- Switch and magnet have ribs for securing in holes

- Quick-connect terminals
- For N.C. Circuits
- ¾" (19mm) Gap
- Switch dimensions: 1 1⁄8"x7⁄16"x 3⁄8" (28x11x10 mm)

SM-4102-TQ/W *White, N.C*

- ⅜" Press fit
- Gold-plated terminals for longer life and reliability
- Switch and magnet have ribs for securing in holes

- Quick-connect terminals
- For N.C. Circuits
- 1" (25mm) Gap
- Switch dimensions: 1⅛"x7⁄16"x⅜" (28x11x10 mm)

Recessed-Mount Magnetic Contacts

SM-4103-TQ/W *White, N.C*

- ⅜" Press-fit with 1" (25mm) switch
- Gold-plated terminals for longer life and reliability
- Rare-earth magnet with nickel plating to protect against chipping and corrosion
- Switch has ribs for securing in hole
- Quick-connect terminals
- For N.C. Circuits
- ½" (12mm) Gap
- Switch dimensions: $^{15}/_{16}$"x$^{7}/_{16}$"x⅜" (24x11x10 mm)

SM-4103-LQ/W *White, N.C.*

- ⅜" Press-fit with ¾" (19mm) switch
- Gold-plated terminals for longer life and reliability
- Rare-earth magnet with nickel plating to protect against chipping and corrosion
- Switch has ribs for securing in hole
- 18" (46cm) Wire leads
- For N.C. Circuits
- ½" (12mm) Gap
- Switch dimensions: ¾"x$^{7}/_{16}$"x⅜" (19x11x10 mm)

SM-4104-TQ/W *White, N.C.*

- ¾" (19mm) Steel-door recessed
- Gold-plated terminals for longer life and reliability
- Switch and magnet have ribs for securing in holes
- Strong, one-piece construction
- Quick-connect terminals
- For N.C. Circuits
- 1" (25mm) Gap (on steel)

SM-4105-LQ/B *Brown, N.C.*

- ¾" (19mm) Steel-door recessed
- Gold-plated terminals for longer life and reliability
- Switch and magnet have ribs for securing in holes
- Strong, one-piece construction
- 18" (46cm) Wire leads
- For N.C. Circuits
- 1" (25mm) Gap (on steel)

SM-4105-LQ/W *White, N.C.*

Plunger-Type Magnetic Contacts

SM-4301-TQ/W *White, N.C*

- Push button
- Magnet and reed switch contained in housing
- Spacer and screws included
- Quick-connect terminals
- For N.C. Circuits
- Plunger travel is ¼" (6m)

SM-4302-LQ/W *White, N.C*

- 360° Rollerball
- Magnet and reed switch contained in housing
- Spacer and screws included
- 18" (46cm) Wire leads
- For N.C. Circuits
- Roller travel is ¼" (6mm)

SM-4303-TQ/W *White, N.C*

- 360° Rollerball
- Magnet and reed switch contained in housing
- Spacer and screws included
- Quick-connect terminals
- For N.C. Circuits
- Roller travel is ¼" (6mm)

Specialty Magnetic Contacts

SECURITY UL LISTED

SM-226LQ Only

SM-226LQ	*N.C.*	SM-226L-3Q	*NO/NC*

- Overhead door surface mount
- Gold and deactivated rhodium plating for longer life and reliability
- Switch contained in curved, low-profile, cast-aluminum housing
- Magnet in gray ABS plastic case mounted on L-shaped bracket

- 24" (61cm) Wire leads enclosed in stainless-steel cable
- 2¾" (70mm) Gap
- Switch dimensions: 4⅜"x1¾"x7⁄16" (111x44x11 mm)

SECURITY UL LISTED

SM-226RQ Only

SM-226RQ	*N.C.*	SM-226R-3Q	*NO/NC*

- Overhead door surface mount
- Gold and deactivated rhodium plating for longer life and reliability
- Switch contained in curved, low-profile, cast-aluminum housing
- Magnet enclosed in round bracket

- 24" (61cm) Wire leads enclosed in stainless-steel cable
- 2¾" (70mm) Gap
- Switch dimensions: 4⅜"x1¾"x7⁄16" (111x44x11 mm)

SM-4201-LQ	*N.C.*

- Industrial, overhead door, track mount
- Rugged aluminum housing
- Adjustable to fit most door-channel widths
- 36" (91cm) Wire leads are enclosed in armored cable

- All mounting hardware included
- For N.C. Circuits
- 3" (76mm) Gap
- Switch dimensions: 2⁹⁄16"x 2¾"x1¾" (70x65x45 mm)

SECURITY c UL us LISTED

SM-4601-LQ Only

SM-4601-LQ	*N.C.*	SM-4601-L3Q	*NO/NC*

- Industrial, wide gap, surface mount
- Rugged aluminum housing
- Weatherproof and sealed for outdoor use
- 36" (91cm) Wire leads are enclosed in armored cable

- 3" (76mm) Gap
- Switch dimensions: 3⁹⁄16"x1"x½" (78x25x13 mm)

Accessories

SM-831
Alnico 5 magnet
1¼" (32mm) Length
¼" (6mm) Diameter

SM-841
Alnico 5 magnet
1⅝" (41mm) Length
⅜" (10mm) Diameter

SM-851
Aluminum "Z" bracket for SM-216Q, SM-226LQ, SM-226-L3Q

SM-852LQ
Aluminum "L" bracket for SM-216Q, SM-226LQ, SM-226L-

HDMI Extenders over Single Cat5e/6

MVE-AH030AQ

MVE-AH030Q

Features

- Extend 1080p HDMI signals up to 196ft (60m) over a single Cat5e/6 cable
- The HDMI Extenders over Single Cat5e/6 support both progressive and interlaced formats: 1080p/1080i/720p/576p/576i/480p/480i.
- **Bi-directional IR** – Send IR signals from the source to the monitor or from the monitor to the source for discrete operation of devices
- **EDID Management** – Eliminate sync issues by choosing from multiple EDID settings
- Dimensions:
  - $3^{3}/_{16}$"x$1^{15}/_{16}$"x1" (81x49x25 mm)
- **Plug and play operation** – comes as a complete set

MVE-AH030Q Only:

- **HDMI Loop Output** – Secondary HDMI output for local displays
- **ARC Option Switch** – Enable Audio Return Channel (ARC) to automatically switch the audio source to that shown by the display device
- **Digital Audio Out** – Send HDMI audio directly to an external sound bar or A/V Receiver
- Dimensions:
  - $3^{15}/_{16}$"x$2^{9}/_{16}$"x1" (100x65x25 mm)

Model Numbers

NEW

MVE-AH030AQ
Range: 196ft (60m) at 1080p

MVE-AH030Q
Range: 196ft (60m) at 1080p

Specifications

Model		MVE-AH030AQ	MVE-AH030Q
Maximum resolution		1080p	
Deep color		24-bit	
Video formats supported		High-speed HDMI, HDCP 1.2	
Audio formats supported		LPCM, Dolby-AC3, DTS7.1, DSD	
Output video		HDMI	
Range (1080p)	Cat6	Up to 196' (60m)	
	Cat5e	Up to 98' (30m)	
Cat5e/6 wiring standard		T568-B	
Operating voltage		5VDC	
Operating temperature		32°~104° F (0°~40° C)	
Weight		5.3-oz (150g) (each)	7.2-oz (205g) (each)
HDMI Loop Output		No	Yes
ARC		No	Yes
Digital Audio Out		No	Yes

HDMI Extender over Dual Cat5e/6

Features

- Extend 1080p HDMI signals up to 196ft (60m) over two Cat5e/6 cables
- **Plug and play operation** – comes as a complete set
- **IR Pass-Through** – Send IR signals from the HDMI source to the HDMI monitor for discrete operation of devices
- The HDMI Extender over Dual Cat5e/6 supports both progressive and interlaced formats: 1080p/1080i/720p/576p/576i/480p/480i
- Dimensions:
  $3^{3}/_{16}$"x$1^{15}/_{16}$"x1" (81x49x25 mm)

Model Number

MVE-AH010Q
Range: 196ft (60m) at 1080p

Specifications

Maximum resolution		1080p
Deep color		24-bit
Video formats supported		High-speed HDMI, HDCP 1.2
Audio formats supported		LPCM, Dolby-AC3, DTS7.1, DSD
Output video		HDMI
Range (1080p)	Cat6	Up to 196' (60m)
	Cat5e	Up to 98' (30m)
Cat5e/6 wiring standard		T568-B
Operating voltage		5VDC
Operating temperature		32°~104° F (0°~40° C)
Weight		4.1-oz (116g) (each)

ENHANCED HDMI Extenders

MVE-AH1H1-01GQ

MVE-AH1H1-02ZQ

Model Numbers

MVE-AH1H1-01GQ NEW
Range: 230ft (70m) at 1080p

MVE-AH1H1-02ZQ NEW
Range: 330ft (100m) at 1080p

Specifications

Model		MVE-AH1H1-01GQ	MVE-AH1H1-02ZQ
Maximum resolution		4Kx2K@30Hz	
Deep color		48-bit	
Video formats supported		High-speed HDMI with 3D, HDCP 1.2	
Audio formats supported		LPCM, Dolby-AC3, DTS 7.1, DSD	
Output video		HDMI	
Range (1080p)	Cat6	Up to 230' (70m)	Up to 330' (100m)
Range (4K)	Cat6	Up to 130' (40m)	Up to 230' (70m)
Video amplifier bandwidth		10.2Gbps	
Cat5e/6 wiring standard		T568-B	
Operating voltage		24VDC	
Operating temperature		32°~104° F (0°~40° C)	
Weight		7.1-oz (200g) (each)	11.3-oz (300g) (each)

Features

- Extend 1080p HDMI signals up to 230ft (70m) for the **MVE-AH1H1-01GQ** and 330ft (100m) for the **MVE-AH1H1-02ZQ** over a single Cat5e/6 cable
- Extend 4K/2K HDMI signals up to 130ft (40m) for the **MVE-AH1H1-01GQ** and 230ft (70m) for the **MVE-AH1H1-02ZQ** over a single Cat5e/6 cable
- The Enhanced HDMI Extender over Cat5e/6 support both progressive and interlaced formats: 4K/1080p/1080i/720p/576p/576i/480p/480i.
- Plug and play operation
- Repeat up to four sets to extend HDMI range up to 918ft (280m) for the
- Bi-Directional IR
- **MVE-AH1H1-01GQ** and 1,300ft (400m) for the **MVE-AH1H1-02ZQ**
- Dimensions:
  - $3^{15}/_{16}$"x$2^{9}/_{16}$"x1" (100x65x25 mm)

MVE-AH1H1-02ZQ Only:

- **Bi-Directional RS-232** – Send RS-232 commands from a control system to the display and back without extra cabling
- **Ethernet pass-through** – 100BaseT Ethernet pass-through to connect remote displays to local networks
- Dimensions:
  - $3^{15}/_{16}$"x$3^{15}/_{16}$"x$1^{1}/_{8}$" (100x100x28 mm)

Wireless HDMI Extender

Model Number

MVE-WH010Q
Range: 98ft (30m) at 1080p

Specifications

MVE-WH010Q	Transmitter	Receiver
Transmission frequency	5.1~5.9 GHz	
RF Communication system	N/A	MIMO
Modulation mode	N/A	OFDM
Frequency stability	+/- 4PPM	
Bandwidth	40MHz	
Transmission power	>12dBm	>15dBm
Receiving sensitivity	<-75dBm	<-65dBm
System latency	<1ms	
IR Remote frequency	N/A	38kHz
Operating temperature	14°~122° F (-10°~50° C)	
Weight	15.5-oz (440g)	15.4-oz (436g)

Features

- Wirelessly transmits HDMI from a DVR, Blu-Ray player, or other high-definition source to a monitor
- Range: Up to 98ft (30m)
- Support resolutions up to 1080p
- Dimensions $5^{13}/_{16}$" x $3^{13}/_{16}$" x $1^{1}/_{16}$" (148x97x18 mm)
- Signal can pass through walls
- IR Pass-through carries remote control signals from the monitor's location back to the source
- Two 5VDC adapters included

HDMI over IP

MVE-AHMPM-01NQ

Model Numbers

MVE-AHMPM-01NQ NEW
HDMI over IP Kit
(1 Transmitter and 1 Receiver)

MVE-AHMPM-01NTQ NEW
HDMI over IP - 1 Transmitter

MVE-AHMPM-01NRQ NEW
HDMI over IP - 1 Receiver

Features

- Extends 1080p HDMI signals up to 393ft (120m) over a single UTP Cat5e/6 cable
- Direct connection point to point units can be connected directly to each other
  - 1 to many: 1 Transmitter to many receivers
  - Many to many: Multiple transmitters to multiple receivers using VLAN switches
- HDCP compliant
- Can be cascaded for many layers by adding more Ethernet switches
- With wideband IR (38-56kHz) control to the source
- Supports TCP/IP protocol
- With mounting ears

Specifications

Maximum resolution		1080p
Video formats supported		DTV/HDTV:480i/576i/480p/576p/720p/1080i/1080p
Output video		HDMI
Range (1080p)	Cat5e/6	Up to 393' (120m)
Cat5e/6 wiring standard		T568-B
Operating voltage		5VDC
Operating temperature		23°~95° F (-5°~35° C)

Application

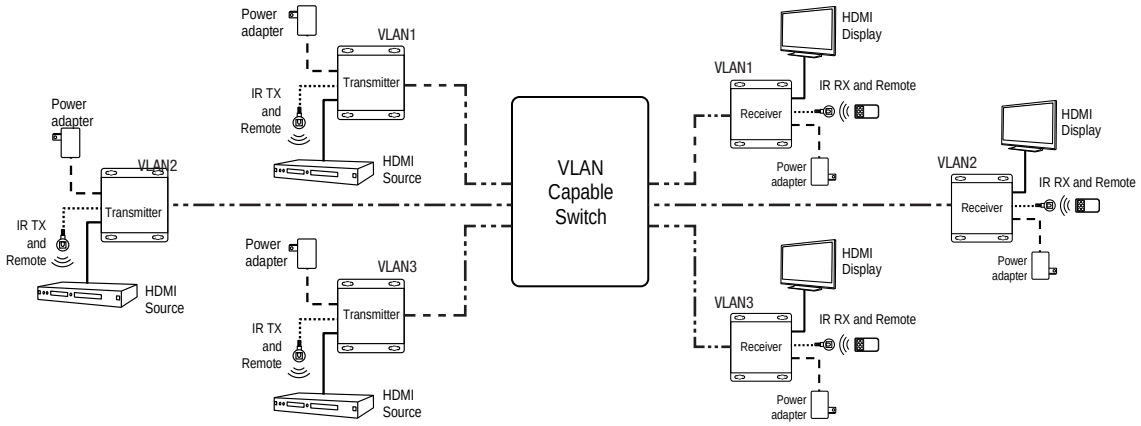

HDMI Extender over Single Coax

Model Number

MVE-AA11-01NQ NEW
Range: 328ft (100m) at 1080p

Specifications

Maximum resolution		1080p
Deep color		36-bit
Video formats supported		High-speed HDMI, HDCP 1.1
Audio formats supported		LPCM, Dolby-AC3, DTS7.1, DSD
Output video		HDMI
Range (1080p)	RG6	Up to 328' (100m)
Coaxial cable		RG6
Operating voltage		5VDC
Operating temperature		32°~104° F (0°~40° C)
Weight		4.2-oz (120g) (each)

Features

- Extend 1080p HDMI signals up to 328ft (100m) over a single coaxial cable
- **Plug and play operation** – comes as a complete set
- **IR Pass-through** – Send IR signals from the source to the monitor for discrete operation of devices
- The HDMI Extender over Coax Cable supports both progressive and interlaced formats: 1080p/1080i/720p/576p/480p /480i.
- Dimensions:
  - $3^{3}/_{16}$"x$1^{15}/_{16}$"x1" (81x49x25 mm)

4K HDMI® Splitters

MVD-AH14-01Q

MVD-AH12-01Q

MVD-AH18-01Q

Features

- Transmit an HDMI source to up to eight different HDMI displays
- Supports up to 4K/2K resolution and 3D video
- Individual status LEDs for each HDMI output
- EDID Management settings
- One (1) 5VDC Power supply included

Model Numbers

MVD-AH12-01Q NEW
4K 1x2 HDMI Splitters

MVD-AH14-01Q NEW
4K 1x4 HDMI Splitters

MVD-AH18-01Q NEW
4K 1x8 HDMI Splitters

Specifications

Input video signal	3.3V
Input DDC signal	5Vp-p (TTL)
Maximum single link range	4K*2K@30hz
Deep color	48bit
Video formats supported	High-speed HDMI, HDCP 1.4
Audio formats supported	LPCM, Dolby-AC3, DTS7.1, DSD
Resolutions supported	4K/1080p/1080i/720p/576p/576i/480p/480i
Operating voltage	5VDC

4K HDMI® Switchers

MVS-AH41-01NQ

MVS-AH31-01NQ

MVS-AH51-01NQ

Features

MVS-AH41-01NQ

- Add four HDMI inputs to almost any high-definition TV or HDMI display
- Supports up to 1080p resolution and 3D video
- Individual status LEDs for each HDMI input
- Switch will automatically select the active input for added convenience
- Use with IR over HDMI Kit (MVE-PN11-01Q) to control the HDMI switch or HDMI sources via remote control

MVS-AH31-01NQ, MVS-AH51-01NQ

- Add three or five HDMI inputs to almost any high-definition TV or HDMI display
- Supports up to 4K/2K resolution and 3D video
- Includes remote control for switching between inputs
- Individual status LEDs for each HDMI input
- Switch will automatically select the active input for added convenience

Model Numbers

MVS-AH31-01NQ NEW
4K 3x1 HDMI Switcher

MVS-AH41-01NQ
4x1 HDMI Switcher

MVS-AH51-01NQ NEW
4K 5x1 HDMI Switcher

Accessories *(MVS-AH41-01NQ only)*

MVE-PN11-01Q
IR over HDMI Kit

Specifications

Model	MVS-AH41-01NQ	MVS-AH31-01NQ	MVS-AH51-01NQ
Resolution support	Up to 1080p	Up to 4K	
HDMI Inputs	4	3	5
Remote switching	Use with IR over HDM Kit	Included	

HDMI Matrix

Features

- Transmits four (4) HDMI sources to up to four (4) different high definition TVs or HDMI displays
- Supports resolutions from 480i to 1080p and 3D video
- Individual status LEDs for each HDMI output
- Compatible with IR over HDMI Kit (MVE-PN11-01Q)
- 5VDC Power supply included

Model Number

MVM-AH44-01YQ
4x4 HDMI Matrix

Specifications

Audio formats supported	LPCM, Dolby-AC3, DTS 7.1, DSD
Resolutions supported	1080p/1080i/720p/576p/576i /480p/480i
Operating temperature	32°~158° F (0°~70° C)
Dimensions	12 3/8"x6 1/8"x1" (315x155x25 mm)
Weight	2-lb 12.8-oz (1.3kg)

IR over HDMI Kit

Features

- Add IR remote pass-through to installations where an HDMI source is in a different room than the HDMI display using existing HDMI cables
- Discreet design – adapters install between the devices and the HDMI cables
- Includes 2 HDMI adapters, 1 IR transmitter, and 1 IR receiver
- IR Transmitter and receiver are each built with a 4.5ft (1.45m) cord for added convenience while installing
- Compatible with other ENFORCER products (sold separately): 4x1 HDMI Switch (MVS-AH41-01NQ), 1x4 HDMI Splitter (MVD-AH14-01NQ), and 4x4 HDMI Matrix (MVM-AH44-01YQ)

Model Number

MVE-PN11-01Q

Specifications

Video formats supported		High-speed HDMI with 3D, HDCP 1.2
Frequency		33~60 kHz (Dual band)
Dimensions	IR Transmitter	1 1/8"x11/16"x1/2" (30x18x12 mm)
	IR Receiver	1 1/8"x11/16"x1/2" (30x18x12 mm)
	HDMI Adapter	1 1/8"x7/8"x3/8" (30x22x10 mm)
	Cable	4.5' (1.45m)
	Jack	3.5mm
Weight		2.2-oz (62g)

HDMI Surge Protector

Features

- Helps prevent damage to sensitive HDMI equipment such as players, monitors
- Intercepts repeated surges and spikes that could damage HDMI A/V equipment
- Built in ESD, EFT
- Reaction Speed <1ns
- Passive operation – no external power required
- Includes a 12" (30cm) grounding wire for convenient connection to ground

Model Number

VS-1AHHAQ

Specifications

ESD Protection		15kV (ESD), 8kV (contact)
EFT Protection		40A (5/50ns)
Surge Protection		5A (8/20ns)
Surge reaction speed		<1ns
Connector	In	HDMI
	Out	HDMI
Material		2 3/16"x1"x1" (56x25x25mm)
Operating Temperature		1.2-oz (35g)
Weight		Aluminum
Dimensions		32°~131°F (0°~55°C)

High-Speed HDMI Cables

Gold-plated connectors

4K Support
Lifetime Warranty
100 Mb/s Cable
Full 1080p Resolution
3D Support
2 Category Cable

Model Numbers

MC-1102-18NQ
18in (0.5m), 28AWG

MC-1102-03FQ
3ft (1m), 28AWG

MC-1102-06FQ
6ft (1.8m), 28AWG

MC-1102-10FQ
10ft (3m), 28AWG

MC-1102-16FQ
16ft (5m), 28AWG

MC-1102-20FQ
20ft (6m), 26AWG

MC-1102-25FQ
25ft (7.6m), 26AWG

MC-1102-30FQ
30ft (9m), 26AWG

MC-1102-50FQ
50ft (15m), 26AWG

Features

- 3D Support
- 4K Support
- Up to 1080p
- Supports Ethernet (100Mb/s)
- Category 2 cable
- Lifetime warranty

HDMI Couplers

MC-2201Q

MC-2101Q

Model Numbers

MC-2201Q
Female-to-female

MC-2101Q
180° Swiveling male-to-female

Features

- For joining two HDMI cables together
- Gold-plated contacts
- Compatible with all 19-pin HDMI cables

HDMI Repeater

Model Number

MVR-HH01Q
Range: Up to 115ft (35m)

Features

- Extends high-definition video and digital audio up to 115ft (35m)
- Supports resolutions from 480i to 1080p

VGA to HDMI Converter w/ Scaler

Model Number: MVA-VH01Q NEW

- Converts VGA and stereo audio to HDMI
- Supports resolutions from 640x480 to 1920x1080
- Plug and play operation
- 5VDC Power supply included
- Weight: 1.4-oz (40g)
- Dimensions:
  - $2^{3}/_{8}$"x$2^{1}/_{8}$"x$^{13}/_{16}$" (61x54x20 mm)

HDMI to VGA Converter

Model Number: MVA-HV01Q NEW

- Supports input resolutions up to 1920x1080
- Supports up to 1920x1080 on VGA output
- Converts HDMI to VGA+Audio
- Stereo audio output
- Plug and play operation
- Weight: 1.5-oz (43g)
- Dimensions:
  - $2^{3}/_{8}$"x$2^{1}/_{8}$"x$^{13}/_{16}$" (61x54x20 mm)

HDMI to Composite Converter

Model Number: MVA-HT01Q NEW

- Converts HDMI to composite video + stereo audio
- Supports input resolutions up to 1920x1080
- Supports NTSC or PAL output
- Stereo analog audio output
- Plug and play operation
- Weight: 1.4-oz (40g)
- Dimensions:
  - $2^{3}/_{8}$"x$2^{1}/_{8}$"x$^{13}/_{16}$" (61x54x20 mm)

Composite to HDMI Converter

Model Number: MVA-TH01Q NEW

- Converts composite video and stereo audio to 720p or 1080p HDMI
- Supports NTSC, PAL, and SECAM video inputs
- Supports up to 1080p on HDMI output
- Stereo audio input
- Switch for switching between 720p and 1080p upscaling
- Plug and play operation
- Weight: 1.4-oz (40g)
- Dimensions:
  - $2^{3}/_{8}$"x$2^{1}/_{8}$"x$^{13}/_{16}$" (61x54x20 mm)

Passive VGA Extender

Model Number

MVE-SV010Q
Range: 196ft (60m) at 1280x1024

Specifications

VGA Connectors		Female, 15-pin
Number of inputs		1
Number of outputs		1
Range	640x480 pixels (15MHz)	443' (135m)
	800x600 pixels (30MHz)	344' (105m)
	1024x768 pixels (60MHz)	246' (75m)
	1280x1024 pixels (100MHz)	196' (60m)
Operating temperature		32°~131° F (0°~55° C)
Weight (single unit)		5-oz (142g)

Features

- Uses Cat5e/6 cable instead of heavier, more expensive VGA cables
- Sold in pairs: One for the video source, one for the monitor
- Small size, only 2½"x2⅝"x1" (64x67x25 mm)
- Passive Operation- No external power
- Transmits VGA signals from personal computers, digital video recorders, video splitters, or similar video sources with a VGA output to CRT or LCD monitors or VGA projectors
- Works with video signals of up to 1280x1024 pixel resolution

Active VGA Extenders

MVD-V1201-1Q

MVD-V1501-1Q

Model Numbers

MVD-V1201-1Q
1 Input, 2 outputs

MVD-V1501-1Q
1 Input, 5 outputs

MVD-V1101-1RQ
Additional receiver

Specifications

Model		MVD-V1201-1Q	MVD-V1501-1Q
VGA Connectors		Female 15 pin	
Number of inputs		1	
Number of outputs		2	5
Number of local outputs		1	
Vertical frequency range		60/75/85 Hz	
Range	640x480; 800x600	984' (300m)	
	1920x1080; 1600x1200	492' (150m)	
	1280x1024	459' (140m)	
Weight	Transmitter	7.3-oz (208g)	11-oz (312g)
	Receiver	3.8-oz (108g)	
Current draw		400mA@5VDC	
Operating temperature		32°~158° F (0°~70° C)	
External power supply		20A@5VDC (2 adapters included)	

Features

- Transmits VGA signals from personal computers, DVRs, or video splitters to CRT or LCD monitors or VGA projectors.
- Local output allows for playback at a local station as well as remote stations
- Extends the range of VGA and stereo signals to up to 984ft (300m) over one Cat5e/6 cable.
- Gain and peak adjustments to account for different UTP cable lengths. Use gain for brightness adjustment and peak for skew adjustment.
- Supports up to 1920x1200 resolution.
- Works with monitors, projectors, HDTVs, and flat panel screens.
- Each set includes one transmitter and one receiver, and is plug-and-play ready

MVD-V1101-1RQ – Additional / Replacement Receiver

- Additional receiver for MVD-V1501-1Q. One transmitter can operate with up to four receivers.
- Replacement receiver unit for MVD-V1201-1Q.

Wireless Alert System

- Up to 1,000ft (305m) transmission range*
- 18 Programmable ringtones
- Connect up to 4 wireless transmitter accessories
- Audible and visual alert via built-in speaker and flashing light
- Wall or desktop mountable
- Output terminals for optional auxiliary device
- Each channel independently programmable
- System includes receiver and transmitter (RA- 4961Q and RA-4961-PBQ)

Model Number

RA-4961-K1Q	*Specifications*
Frequency	914.8MHz
Channels	4
Accessories per channel	1
Relay Output (channel 4 only)	1 (Form C Relay), 1A@50VDC
Power supply	3 "C" batteries or 6VDC power adapter (Both not included)
Current draw – Standby	0.3mA
Current draw – Max	220mA
Estimated battery life	270 days (3 triggers/day)
Receiver low battery indicator	Notification LED flashes every 5 seconds
Accessory low battery indicator	Zone LED for accessory blinks continuously
Sound level (dB)	Up to 96dB@1ft(30cm)
Operating temperature	32º~140º F (0º~60º C)
Dimensions	$5^{1}/_{4}$"x$1^{9}/_{16}$"x$6^{5}/_{8}$" (133x40x169 mm)

Wireless Pushbutton

RA-4961-PBQ NEW

- Use as a wireless doorbell
- Up to 1,000ft (305m) transmission range*
- Easy installation
- Note: that 1pc of RA-4961-PBQ is included with the RA-4961-K1Q

Wireless Indoor PIR Sensor

RA-4961-PRQ NEW

- Wirelessly monitor entryways, rooms, or other areas
- Up to 1,000ft (305m) transmission range*
- Sensing range up to 26ft (8m)
- Programmable activation time
- Runs on batteries for a convenient, wireless installation
- Adjustable mounting angle

Wireless Magnetic Contact

RA-4961-MCQ NEW

- Wirelessly monitor windows, doors, or other areas
- Up to 1,000ft (305m) transmission range*
- Activates each time the door or window is moved
- Magnet can be placed on either side
- Adhesive mount – no screws required

Wireless Mailbox/Tilt Sensor

RA-4961-MBQ NEW

- Wirelessly monitor mailboxes or any tilting motion
- Up to 1,000ft (305m) transmission range*
- Mounts to standard mailbox flaps or other flat surfaces that may tilt
- Adhesive mount – no screws required
- Adjustable sensing angle

Wireless Outdoor PIR Sensor

RA-4961-DSQ NEW

- Wirelessly monitor driveways, walkways or other areas
- Up to 1,000ft (305m) transmission range*
- Programmable activation time
- Programmable sensing range up to 39ft (12m)
- Runs on batteries for a convenient, wireless installation
- Adjustable mounting angle

Wireless Vibrating Receiver

RA-4961-VPQ NEW

- Functions similar to the RA-4961-K1Q receiver
- Audible, visual and physical alert via built-in speaker, LEDs and vibration
- Belt clip and small size for easy portability
- Each channel independently programmable

* Line of sight. Transmitter range will vary depending on installation and operation environment

Wireless Motion Alert

Model Number

RC-135Q NEW

- Provides audio and/or visual alert when triggered
- Sensor range up to 26ft (8m) at 40° angle at 3ft (1m) height
- Up to 390ft (120m) transmission range between sensor and receiver*
- Plug and play operation, no hardwiring necessary
- 4-position switch: Off, Silent, Low, High
- Mounting hardware included
- Battery operated (3 AAA for sensor and 2 C for receiver). Batteries not included. Receiver can be powered by a 500mA@6VDC power adapter (not included)
- Battery life for sensor is up to 6 months and for receiver is up to 3 months (based on 4 triggers/day on High mode)
- Low battery indicators on receiver and sensor

Wireless Doorbell

Model Number

AC-132Q NEW

- Battery operated
- Operating range of up to 492ft (150m)*
- Automatic Pairing
- Weather Resistant push button (IP44) with LED indicator
- 32 sounds and volume control on the receiver (included)
- Requires 1x CR2032 battery (included) for push button and 3 AA batteries (not included) for the receiver

Motion Entry Alert

Model Number

AS-6111Q NEW

- Mount above door or other entry point to alert when someone enters or exits
- Sounds for approximately 4 seconds or for as long as the sensor detects changes in visible light
- CDS sensor operates by detecting sudden changes in visible light
- Sensor range 10ft (3m)
- Designed for motion alerts only
- Low current drain (0.05mA standby)
- Provides an audible alert (doorbell sound) when triggered
- Battery operated (3 AAA batteries, not included)

Auto Voice Reminder

Model Number

AS-1511 NEW

- Easily record personal reminders, warnings or other messages
- Play a welcome message to customers in commercial establishments
- Record custom message up to 15 seconds
- Adjustable volume (Low, High, Off)
- Sensor detection angle and range 100°@30ft (9m)
- Easy installation, no hardwiring necessary
- Battery operated (3 AAA batteries, not included)
- Battery life is up to 2 months (10 triggers/day)
- For indoor motion alerts only – not designed to be a security device
- Wall-mountable

* Line of sight. Transmitter range will vary depending on installation and operation environment

Occupancy Notification System

Sensor

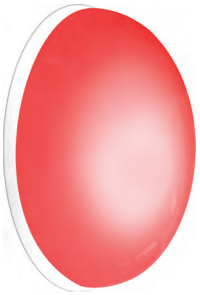

Notification LED

Model Number

ON-R100-KM1Q NEW
Occupancy Notification System

Application

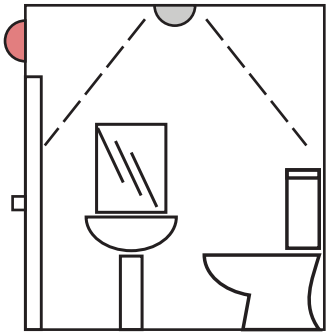

Features

- Monitor up to 2 rooms. (bathroom, storage room, changing room, small conference room, private office, hallway, computer room, dental exam room, dog house, barn, etc.)
- When used for bathroom occupancy, can:
  - Reduce traffic jams and waiting time
  - Increase privacy – no more knocking to check
- Monitor use time – know when someone has been using a room for too long
- Detects occupancy via PIR, light, or both
- Redirect traffic when a monitored room is in use
- Simple enough for DIY installation
- Each transmitter can be monitored by an unlimited number of receivers
- Choose from 2-Ch desk/wall mount receiver or 1-ch wall mount receiver
- Power: 5~12 VDC. Micro USB or terminal block

Battery Powered LED Lights

LD-P10-SQ *LED Puck with PIR* NEW
LD-P20-SQ *LED Bar with PIR*

- 3 Modes – Off, On or PIR activated
- Uses 3 x AA batteries (not included)
- 10' (3m) Range on the PIR
- 100° Sensing Angle
- Indoor Use
- LD-P20Q only:
- Magnetic mounting bracket

LD-P10-SQ

LD-P20-SQ

Wireless Powered LED Lights

LD-R10-S1Q *LED Puck with Wireless remote* NEW
LD-R10-RQ *Extra receiver LED Puck*

- Uses 3 x AA batteries for the light and 2 x AAA for the controller (not included)
- 20' (6m) Range
- Control up to 24 lights
- Controller has On, Off, Timed operation and Brightness
- Indoor Use

Motion Activated Security Camera

HD

720p Resolution

Model Number

NEW

EV-6996-N6BQ
48 IR LEDs, 12-MP Camera, 720p Video + Audio

Specifications

Lens	High precision multi-layer glass with coating
Infrared light	48 non glow 940nm LEDs
PIR detection angle	48°
PIR detection range	60ft (20m)
Weatherproof design	IP66
Video	20fps with audio
Video format	Motion JPEG
White balance	Auto
Time-stamp	Yes
Battery	8x AA alkaline batteries (not included)
External operating voltage	12VDC (not included)
Time lapse	5~300 seconds (programmable)
TV Out	NTSC/PAL
Operating temperature	14°~104° F (-10°~40° C)
Operating humidity	5%~90%

Features

- 12-Megapixel camera, 50° viewing angle
- 720p HD resolution
- Automatic IR emitter light control, AWB, and AEC
- Prog time lapse and photo burst
- Weatherproof (IP66)
- Real-time clock
- Temperature sensor stamps readings
- 48 940nm IR LEDs
- Strap holes allow for easy rugged surface mounting
- Battery powered or use with 12VDC external power
- Store images and video via SD card (up to 32GB) (not included)
- Built-in microphone picks up audio during video recording
- Built-in 1.5" B&W LCD display
- USB, AV, and TV Out ports

Motion Activated Trail Camera

HD

720p Resolution

Model Number

NEW

EV-6996-N6CQ
48 IR LEDs, 8-MP Camera, 720p Video + Audio

Specifications

Lens	High precision multi-layer glass with coating
Infrared light	40 non glow 940nm LEDs
PIR detection angle	48°
PIR detection range	50ft (18m)
Weatherproof design	IP66
Video	20fps with audio
Video format	Motion JPEG
White balance	Auto
Time-stamp	Yes
Battery	Size C x 4pcs (not included)
External operating voltage	6VDC (not included)
Time lapse	5~300 seconds (programmable)
TV Out	NTSC/PAL
Operating temperature	14°~104° F (-10°~40° C)
Operating humidity	5%~90%

Features

- 8-Megapixel camera, 50° viewing angle
- 720p HD resolution
- Weatherproof (IP66)
- 40 Invisible 940nm IR LEDs
- Real time clock
- Automatic IR emitter light control, white balance, and auto expose
- Prog time lapse and photo 1-9 burst
- Temperature sensor stamps readings
- Compact size
- Tripod nut & strap holes allow for easy and flexible tripod, wall, or rough surface mounting
- Battery powered or use with 6VDC external power
- Store images and video via SD card (up to 32GB) (not included)
- Automatic time-stamp
- Built-in 1.5" black & white LCD display
- USB, AV, and TV Out ports

Wireless Entry Alert System

Features

- For monitoring a driveway or for use as an entrance indicator
- No wiring necessary between sensor and speaker
- Sensor is weatherproof for outdoor use
- Speaker makes a chime or alarm sound when the beam is interrupted
- Wireless range: Up to 328ft (100m) between the sensor and speaker
- Sensor range: Up to 22ft (7m)
- Each sensor can be connected to an unlimited number of speakers
- Each speaker can be connected to up to 5 sensors
- Simple installation with no hard wiring required – all components are either wireless or plug into each other
- Mounting brackets available (see page 86)

Model Number

E-931CS22RFCQ
Sensor range: Up to 22ft (7m)
Wireless range: Up to 328ft (100m)

Accessories

E-931ACC-SFQ
Additional wireless speaker

E-931ACC-CQ
Digital counter, plugs into speaker

E-931ACC-RC1Q
3" (76mm) Round reflector

E-931ACC-HR1Q
Hood for reflector

E-931ACC-SPQ
Solar charger for sensor unit

Entry Alert System

Features

- For monitoring an entrance or using as an entrance indicator
- Photoelectric beam sensor
- Makes "ding-dong" or siren sound if beam is interrupted
- Speaker volume can be adjusted or turned off
- When in siren mode, sounding time is adjustable from 3~30 seconds
- 9VDC Adapter included
- All components plug into each other - No hard wiring required
- 32ft Cable from speaker to sensor
- Mounting brackets available (see page 86)

Model Number

E-931CS22RRCQ
Sensor range: 22ft (7m)

Accessories

E-931ACC-SQ
Additional speaker

E-931ACC-CQ
Digital counter, plugs into speaker

E-931ACC-RC1Q
3" (76mm) Round reflector

E-931ACC-R2Q
2" (50mm) Square reflector

E-931ACC-HR1Q
Hood for reflector

Dummy Mini Rollerball Camera

VD-20BNNAQ

- 23 Working LEDs turn on at night to simulate real camera operation (requires 2 AA batteries)
- LEDs should operate up to 1 year under typical use before batteries need replacing

Dummy Box Camera

VD-10BNA

- Single battery-powered flashing LED (requires 2 AAA batteries)

Dummy IR Bullet Camera

VD-10PL

- Working IR LEDs turn on in the dark and off in the light
- Requires optional 12VDC power adapter for LEDs.

Solar-powered Dummy Bullet Camera

VD-30SSQ

- 24 Working LEDs turn on at night to simulate real camera operation (requires 2 AAA rechargeable batteries)
- LEDs should operate for several years under typical use before batteries need replacing

Dummy Bullet Camera

VD-30BNNAQ

- 23 Working LEDs turn on at night to simulate real camera operation (requires 2 AAA batteries)
- LEDs should operate up to 1 year under typical use before batteries need replacing

Dummy Dual Beam Sensor

BD-T100Q

- Strong ABS plastic construction
- Wall- or pole-mountable
- Single battery-powered flashing LED (requires 2 AA batteries)

Dummy Keypad

KD-100Q

- Stainless-steel housing
- Keypad beeps when keys are pressed
- Battery-powered LEDs flash continuously (requires 4 AAA batteries)

Entry-Level Alarm

Model Number

E-100LB
Entry-level alarm

Features

- Miniature alarm brain
  - Patented Q.Q.T. for quick and quiet test
  - Fail-safe arming
  - Patented Phase-5 Protection
  - Dual power protection (D.P.P.)
- Multi-tone siren
  - Super-small, 3-tone, 124dB. No "toy" sounds.
- Dual-stage shock sensor (patented)
- 5-Function LED
- Multi-function push button (VET)
- Two 4-Button, 2-Channel Transmitters
  - Use for 2nd channel (trunk release) and panic.
  - Quiet Mode overrides chirp through remote.
- Instant triggering
- Flashing parking lights (Built-in relay)
- Door lock outputs (Pos./Neg. Flip-Flop)
- Starter disable output
- Multiple programming functions

Full-Featured Alarm System

Model Number

E-300L
3-Channel alarm system

Features

- Instant triggering with multiple trigger inputs
- Miniature alarm brain
  - Patented Q.Q.T. for quick and quiet test
  - Fail-safe arming
  - Phase-II protection
- Two 3-button transmitters
  - 2nd & 3rd channel output, plus second car operation
- Dual-stage shock sensor (patented)
- Dual-stage glass-break sensor
- Multi-tone siren
  - Super-small, 3-tone, 124dB, no "toy" sounds
- 5-function LED
- Multi-function push button (VET)
- Flashing parking lights
- Door lock outputs (+ or -)
- Starter disable
- Domelight supervision
- Multiple programming functions:
  - Active/passive arming
  - Chirp/no chirp
  - 0.4/6.4-sec. door lock/unlock output
  - N.O./N.C. trigger input
  - Autolock or active locking of doors
  - Permanent disarm or automatic rearm
  - Current and/or switch sensing (with fan bypass)
  - Ignition lock/unlock on/off
  - Automatic Starter Disable on/off

High-End Keyless Entry/Alarm

Model Number

SLI® 840
High-end keyless entry/alarm

Features

- Miniature alarm brain
  - All-modular connections
  - Patented Q.Q.T. for quick and quiet test
  - Patented Fail-Safe arming.
  - Phase II protection.
- Multi-tone siren and separate Horn-honk outputs
  - Small, 3-tone, 124dB, no "toy" sounds.
- Two 4-button, 2-channel "Icon" Remotes
- Dual-stage shock sensor (Patented)
- 7-Function LED
- Multi-function push button (VET)
- Door lock outputs (+/- reversing)
- Starter disable (- output)
- Domelight supervision (- output)
- 13 Programming Functions

Keyless Entry Upgrade Alarm

Model Numbers

SLI® 820
Keyless entry upgrade

SLI® 820RA
Keyless entry upgrade, no siren

Features

- Easily turns most factory keyless entry systems into complete security systems
- Uses the vehicle's OEM transmitters to arm and disarm system
- Automatically learns polarity of vehicle's door locks for simple installation
- Includes dual-stage electronic shock sensor
- Built-in parking light relay
- Starter disable output
- Push-button included for valet and emergency disarm (VET)
- LED indicates arming
- 5 instant-triggering zones
- Defective zone bypass
- Patented fail-safe arming
- Programmable

Touchkey Immobilizer

Model Number

SLI® 762FP-ISS
Touchkey immobilizer

Features

- Fully automatic arming 30 seconds after ignition is turned off
- Disarm by inserting Touchkey into Backlit Receptacle
- Immobilization of up to 2 electrical circuits
- 2 Touchkeys supplied with each unit. Up to 4 Touchkeys can be learned with a simple code learning procedure
- Unique security code to override if Touchkey is lost or stolen
- 2 Built-in 30-Amp relays
- Stylish backlit receptacle for easy use and operation at night
- All code information is stored in non-volatile EEPROM memory to protect data in case of power loss
- LED located in backlit receptacle flashes to indicate immobilizer is armed, disarmed, or triggered
- Stealth installation—all black wires
- Multiple car operation: One Touchkey can control multiple vehicles

Passive Proximity Immobilizer

Model Number

SLI® 762PP-ISS
Passive proximity immobilizer

Features

- Fully automatic arming 30 seconds after ignition is turned off
- Simple disarming. Immobilizer automatically reads Controller when starting ignition. No buttons to push
- Immobilization of up to 3 electrical circuits
- 2 Built-in 30-Amp relays and 1transistor output
- All code information is stored in non-volatile EEPROM memory to protect data in case of power loss
- Stealth installation—all black wires
- 2 Controllers supplied with each unit. Up to 4 controllers can be learned with simple code learning procedure
- Unique security code for override if controller is lost or stolen
- The flexible sensing coil can be mounted in many positions to make installation easier
- LED flashes to indicate Immobilizer is armed, disarmed, or triggered
- Multiple car operation—One controller can work with multiple vehicles

Vehicle Accessories

Dual-Stage Microwave Sensor

SLI® 259A

- Dual-stage protection – Chirps siren if exterior zone violated, triggers alarm if interior zone is violated

Dual-Stage Electromagnetic Shock Sensor

SS-052B

- Dual-stage protection – Chirps siren if car lightly tapped, triggers alarm on break-in or vandalism attempts

Dual-Stage Glass-break Sensor

SS-051ME

- Includes remote microphone
- Dual-stage protection – Chirps siren on light tap of window, triggers alarm on break-in

Pin Switch

SS-061LSN

- Patented heavy-duty long steel body with nylon fiberglass shaft and stainless-steel contact terminal

PATENTED

2 & 4 Window Roll-up Modules

SR-5220A /SR-5440A

- Compatible with most power window systems

Power Door Lock Interface

SR-5201R

- Allow nearly any alarm to control nearly any power door lock type

Relay

X-187-037-1SC

- SPDT,12V, 30A/40A Heavy-duty automotive relay

3-Tone Siren

SH-532L

- Three tones
- 124dB Multitone

Pin Switch

SS-066TL

- Pin switch

Dashboard Camera

1080p Resolution

GPS Built-in

HD

Features

- Built-in GPS sensor
- 1080p HD Video recording
- 140° Wide viewing angle
- 3MP CMOS Sensor
- WDR – Captures clear images even in strong backlight
- 2.7" 16:9 Widescreen display
- Can remove from mount and use as a camera to take still images
- F1.6 Aperture for low-light performance
- Store images and video on micro SD card (up to 32GB, not included)
- Exports as MOV format, HDMI output
- Auto start/stop recording
- G-Sensor for automatic file protection
- GPS Tracker logs camera location and speed while recording
- Software playback with Google Maps™

Model Number

DC-200GQ
1080p Dashboard Camera

Accessories

DC-ACC-CS1Q
Cigarette lighter adapter socket

Benefits

- Provide video evidence
- Prevent insurance fraud
- Keep visual record of accidents
- Capture scenic drives
- Document your travel and route
- Video black box
- Monitor employees and company fleet vehicles
- Monitor driving speed
- Record vehicle audio
- Use as camera to document accidents
- Fight police tickets with video evidence
- Record lawbreakers
- Prevent vehicle abuse and misuse
- Report bad drivers
- Share events with friends

Motorcycle Camera

1080p Resolution

HD

Features

- 1080p HD Video recording
- 160° Ultra-wide angle
- Interchangeable lens
- F1.8 Aperture
- Low light performance
- 6 Element lens
- H.264 Compression, MOV Format
- G-Sensor for automatic file protection
- Image stabilizer
- Built-in high performance WiFi module for quick setup, stream and sharing
- Streamlined, featherweight and water-resistant design
- Engine start mode (Auto Start / Stop)
- Loop recording prevents running out of memory capacity
- Store images and video on micro SD card (up to 64GB, not included)
- Optional time and date stamp
- Mounting bracket is compatible with all motorcycles
- Multiple mounting brackets included
- Mix & match lens decals to suit your motorcycle
- Power converter created for motorcycle
- Free iOS or Android app

Model number

NEW

DC-M100Q
1080p Motorcycle Camera

Benefits

- Provide video evidence
- Prevent insurance fraud
- Keep visual record of accidents
- Capture scenic drives
- Excellent contrast and high performance even at night-time
- Video black box
- Continuous operation. No batteries to recharge
- Low air resistance
- Record vehicle audio
- Fight police tickets with video evidence
- Record lawbreakers
- Prevent vehicle abuse and misuse
- Report bad drivers
- Share events with friends

Model Number Index

A AC-132Q 117
AS-1511 117
AS-6111Q 117
B BD-T100Q 121
C CA-111P 70
CA-121T 70
CA-1510-3FLQ 70
CA-1515Q 70
CA-151P 70
CA-151T 70
CA-1526-1F 70
CA-1610-3FLQ 70
CA-1615-06LQ 70
CA-1616Q 70
CA-161P 70
CA-161T 70
CA-1A1T 70
CS-PD115-PAQ 89
D DC-200GQ 125
DC-ACC-CS1Q 125
DC-M100Q 125
DE-S101Q 67
DH-151SQ 20
DH-171SQ 20
DP-222-MQ 34
DP-222Q 34
DP-234-MQ 34
DP-234Q 34
DP-236-BQ 32
DP-236-MQ 32
DP-236Q 32
DP-236-SQ 32
DP-A21Q 33
DP-A22Q 33
DRH-104Q 49
DRH-108Q 49
DRH-116Q 49
DRN-104Q 53
DRN-108Q 53
DRN-116Q 53
E E-100LB 122
E-300L 122
E-37ANT 81
E-37EV 81
E-37RV 81
E-921APQ 92
E-921CPQ 92
E-931ACC-BLS6Q 84, 85
E-931ACC-BLS7Q 84, 85
E-931ACC-BLS8Q 84, 85
E-931ACC-CQ 120
E-931ACC-HR1Q 85, 86, 120
E-931ACC-R2Q 120
E-931ACC-RC1Q 85, 120
E-931ACC-SFQ 120
E-931ACC-SPQ 120
E-931ACC-SQ 120
E-931CS22RFCQ 120
E-931CS22RRCQ 120
E-931-S33PRGQ 86, 87
E-931-S35RRGQ 87
E-931-S50RRGQ 86, 87
E-931-S50RRLQ 88
E-932-D33TBQ 89
E-932-S16RRQ 89
E-936-S35RRGQ 85
E-936-S45RRGQ 84, 87
E-941D-1K2P 11
E-941D-600/PQ 9, 11
E-941DA-1K2P 8
E-941DA-1K2Q 8
E-941DA-600Q/PQ 9
E-941EC2-N1Q 6, 8, 60
E-941S-1K2/HQ 6, 8, 11
E-941S-1K2/LQ 6, 8, 11
E-941S-1K2/PQ 6, 8, 11
E-941S-1K2/UQ 6, 8, 11
E-941S-1K2/ZQ 6, 8, 11
E-941S-1K5/L 11
E-941S-1K5/P 11
E-941S300R/LQ 11
E-941S300R/PQ 11
E-941S300R/UQ 11
E-941S300R/ZQ 11
E-941S-600/HQ 7, 9, 11
E-941S-600/LQ 7, 9, 11
E-941S-600/PQ 7, 11
E-941S-600/UQ 7, 9, 11
E-941S-600/ZQ 7, 9, 11
E-941SA-1200 6
E-941SA-1K2PD 6
E-941SA-1K2PQ 6
E-941SA-1K5Q 10
E-941SA-300 10
E-941SA-300RQ 10
E-941SA-600 7
E-941SA-600PQ 7
E-941SA-80Q 10
E-942F-1300/L 12
E-942F1300/ZQ 12
E-942F-600/L 12
E-942F-600/Z 12
E-942FC-1300 12
E-942FC-1K3SQ 13
E-942FC-600 12
E-942FC-600SQ 13
E-946F-1K2/LQ 12
E-946FC-1K2SQ 13
E-946FC-1K2Q 12
E-946FC-600Q 12
E-960-D190Q 82
E-960-D290Q 82
E-960-D90GQ 82, 87
E-960-D90Q 82
E-9611-2B25 90
E-961-S50TB 88
E-961-S90WQ 89
E-9622-4B25 90
E-9622-4W25 90
E-9626-2B190Q 90
E-9643-4B190Q 90
E-9644-6B25 90
E-9644-6W25 90
E-964-D390Q 82
E-964-Q165Q 83
E-964-Q330Q 83
E-964-Q495Q 83
E-964-Q660Q 83
E-964-S50TB 88
E-9660-8B25 90
E-9661-6B190Q 90
E-9679-8B190Q 90
E-9680-10B25 90
EAP-5D1MQ 35
EAP-5D1Q 35
EAP-5D5Q 35
EB-C304-01EQ 69
EB-P101-01HQ 66
EB-P101-01Q 66
EB-P101-20HQ 66
EB-P101-20Q 66
EB-P101-20VQ 67
EB-P101-24GQ 67
EB-P101-25WQ 67
EB-P104-01Q 68
EB-P116-01Q 68
EB-P304-01MQ 69
EB-P316-60EQ 69
EB-P316-60MQ 69
EB-P501-01Q 66
EB-P501-01SQ 66
EB-P501-20Q 66
ENFORCER 93
ENFORCER 190 93
EV-1606-N2SQ 58
EV-1816-NKGQ 58
EV-2203-AMWAQ 48
EV-2706-N3GQ 55
EV-2706-N3WQ 55
EV-2706-NFGQ 55
EV-2706-NFWQ 55
EV-4606-N3SBQ 61
EV-5105-N1SQ 61
EV-6600-N2BQ 59
EV-6620-N3WQ 59
EV-6640-N3WQ 60
EV-6681-N3WQ 59
EV-6996-N6BQ 119
EV-6996-N6CQ 119
EV-7100CEILM 60
EV-7100CORNM 60
EV-7100FLUSM 60
EV-7100POLEM 60
EV-7605-NYWQ 60
EVA-CB0R1Q 70
EVA-F5521-3Q 70
EVA-M5521-3Q 70
EVA-RS1 67
EV-C1303-NMGQ 58
EV-C2001-N2WQ 56
EV-C2001-NMWQ 56
EV-DCLGQ 57
EV-DCLWQ 57
EV-DCSGQ 57
EV-DCSWQ 57
EV-DDLGQ 57
EV-DDLWQ 57
EV-DDSGQ 57
EV-DDSWQ 57
EV-DSLGQ 57
EV-DSLWQ 57
EV-DSSGQ 57
EV-DSSWQ 57
EV-DWLGQ 57
EV-DWLWQ 57
EV-DWSGQ 57
EV-DWSWQ 57
EV-H4203-A3SQ 48
EV-H6206-A3WQ 48
EV-N1206-2W4Q 51
EV-N1206-MW4Q 51
EV-N2206-2W4Q 50
EV-N2206-MW4Q 50
EV-N2236-MW4Q 52
EV-N4206-2S4Q 52
EV-N6206-ZW4Q 52
EVP-124M6P16Q 63
EVP-1SA4P4UL 63
EVP-1SA4P9UL 63
EVP-1SA8P16UL 63
EVT-AB1 68
EVT-AH16-VT2Q 68
EVT-RB1-4T2 68
EVT-TB1-42T 68
EV-Y1203-A2WQ 47
EV-Y1203-AMWQ 47
EV-Y2203-A2WQ 46
EV-Y2203-AMWQ 46
I IPB-A1200Q 75
IPB-A1100Q 75
IPV-P188Q 73
IPV-PD88Q 73
K KD-100Q 121
L LD-1123-PQ 91
LD-P10-SQ 118
LD-P20-SQ 118
LD-R10-S1Q/RQ 118
M MC-1102-03FQ 113
MC-1102-06FQ 113
MC-1102-10FQ 113
MC-1102-16FQ 113
MC-1102-18NQ 113
MC-1102-20FQ 113
MC-1102-25FQ 113
MC-1102-30FQ 113
MC-1102-50FQ 113
MC-2101Q 113
MC-2201Q 113
MVA-HT01Q 114
MVA-HV01Q 114
MVA-VH01Q 114
MVD-AH12-01Q 111
MVD-AH14-01Q 111
MVD-AH18-01Q 111
MVD-V1101-1RQ 115
MVD-V1201-1Q 115
MVD-V1501-1Q 115
MVE-AA11-01NQ 110
MVE-AH010Q 108
MVE-AH030AQ 108
MVE-AH030Q 108
MVE-AH1H1-01GQ 109
MVE-AH1H1-02ZQ 109
MVE-AHMPM-01NQ 110
MVE-AHMPM-01NRQ 110
MVE-AHMPM-01NTQ 110
MVE-PN11-01Q 111, 112
MVE-SV010Q 115
MVE-WH010Q 109
MVM-AH44-01YQ 112
MVR-HH01Q 113
MVS-AH31-01NQ 111
MVS-AH41-01NQ 111
MVS-AH51-01NQ 111
N NE-AE01-030TQ 75
NE-SE01-020Q 75
NJ-P101M-PQ 74
NR-P101FQ 74
O ON-R100-KM1Q 91, 118
P PA-U0405-NULQ 65
PD-5PAQ 35
PD-9PSQ 63
PH-A1612-PUQ 64
PH-U1612-PULQ 64
PR-112S-A 30
PR-312S-PQ 30
PR-K1K1-AQ 25, 26, 27, 28, 30
PR-K1S1-A 25, 26, 27, 28, 30
PS-U0406-PULQ 62
PS-U0906-PULQ 62
PS-U1806-PULQ 62
PS-U1812-PULQ 62
PS-U3612-PULQ 62
R RA-4961-DSQ 116
RA-4961-K1Q 116
RA-4961-MBQ 116
RA-4961-MCQ 116
RA-4961-PBQ 116
RA-4961-PRQ 116
RA-4961-VPQ 116
RC-135Q 117
S SA-025EQ 22
SA-025Q 23, 101
SA-026Q 23, 101
SA-027HQ 23, 101
SA-027WQ 23, 101
SB-L10V1-20Q 65
SB-P1012-26Q 65
SD-5RFS04 41

Model Number Index

S
SD-5RFS05 41
SD-5RMG02 41
SD-5RMR03 41
SD-5RTW09 41
SD-5SFS06 41
SD-5SMG01 41
SD-5STW07 41
SD-5STW08 41
SD-5STW10 41
SD-6176-SS1Q 40
SD-6176-SSVQ 40
SD-6276-SS1Q 40
SD-6276-SSVQ 40
SD-71002-V0 44
SD-7101KBPE1Q 40
SD-7101RAEX1Q 40
SD-7103GC-PEQ 38
SD-7103GC-PTQ 38
SD-7104SGEX1Q 40
SD-71051-V0 44
SD-7202GC-PEQ 38
SD-7202GC-PTQ 38
SD-7204SGEX1Q 40
SD-72051-V0 44
SD-72081-6MQ 44
SD-7213-GSP 39
SD-7213-RSP 39
SD-7217-GSBQ 39
SD-7217GWQ 38
SD-7223GW-LQ 38
SD-7275SGEX1Q 40
SD-7286-GWQ 39
SD-7428-GSEQ 42
SD-7623-GSTQ 39
SD-8103GT-PEQ 39
SD-8201GTPE1Q 39
SD-8202GT-PEQ 39
SD-9163-KS1Q 43
SD-9163-KSQ 43
SD-9163-KSVQ 43
SD-9263-KS1Q 43
SD-9263-KSQ 43
SD-9263-KSVQ 43
SD-927PKC-NEQ 43
SD-927PKC-NFQ 43
SD-927PKC-NSQ 43
SD-927PWCQ 43
SD-961A-36 22
SD-962AR-36A 36
SD-962AR-36G 36
SD-962AR-36M 36
SD-962H-6LB 36
SD-962HL-4A 36
SD-969-A18 21
SD-969-M15Q/B: Bronze 21
SD-969-M15Q/S: Silver 21
SD-969-S18 21
SD-969-T15Q/B: Bronze 21
SD-969-T15Q/S: Silver 21
SD-993B-SS 20
SD-993S-SB 20
SD-993S-UB 20
SD-994A-A1AQ 15
SD-994A-A1SQ 15
SD-994C 14
SD-994C24 14
SD-995A-A1Q 15
SD-995A-D3Q 17
SD-995C 14
SD-995C24 14
SD-995C-LE25 ....14, 16
SD-995C-LE50 ....14, 16
SD-995JA-11Q 14, 16
SD-995RE-21Q 15
SD-9963-KSGQ 42
SD-996C-NUQ 16
SD-996C-NUVQ 16
SD-996C-U1VQ 16
SD-997A-GBQ 18
SD-997B-1SQ 19
SD-997B-GBQ 18
SD-997C-GCQ 19
SD-997SMB-AQ 18
SD-997UB-AQ 18
SD-998C-NUQ 17
SD-C101-SBAQ 37
SD-C101-SBBQ 37
SD-C101-SGQ 37
SD-7175SGEX1Q 40
SD-72002-V0 44
SD-7201GAPT1Q 38
SD-7201GCPE1Q 38
SD-7201GC-PEQ 38
SD-7201GFPE1Q 38
SD-7201KBQ 40
SD-7201RCPE1Q 38
SD-C121-S 37
SD-C131-SQ 37
SD-R400-BQ 42
SH-504Q 96
SH-506Q 96
SH-532L 96, 124
SK-1011-SDQ 24
SK-1123-FQ 25
SK-1123-SDQ 28
SK-1123-SPQ 28
SK-1131-SPQ 24
SK-1323-SDQ 27
SK-1323-SPQ 27
SK-2323-SDQ 26
SK-2323-SPAQ 26
SK-2323-SPQ 26
SK-2611-SFSQ 31
SK-3523-KEY 29
SK-3523-SDQ 29
SK-4131-SPSQ 25
SK-7814-DDQ 31
SK-910R3Q 78
SK-910R4-4Q 78
SK-910R4Q 78
SK-910RAQ 76
SK-910RAV2Q 77
SK-910RAVQ 76
SK-910RB2-4Q 77
SK-910RB2Q 77
SK-910RB-4Q 76
SK-910RBQ 76
SK-915BA 79, 81
SK-915LP 79
SK-917T2A-UQ 79
SK-917TP4J-NUQ 79
SK-919TD1S-UP 79
SK-919TD2A-UP 79
SK-919TDWS-BU 81
SK-919TP1F-NUQ 80
SK-919TP1H-BUQ 80
SK-919TP2F-NUQ 80
SK-919TP2H-NUQ 80
SK-919TP3F-NUQ 80
SK-919TP3JRUQ 79
SK-919TP4F-NUQ 80
SK-919TP4H-NUQ 80
SK-919TP4J-NUQ 79
SK-919TT1S-BU 79
SK-91ERSD 76, 77, 78
SK-939TDWS-BUQ 81
SK-939TP1F-NUQ 80
SK-939TP2F-NUQ 80
SK-939TP3F-NUQ 80
SK-939TP4F-NUQ 80
SK-939TS1S 79
SK-939TS2A-PQ 79
SK-939TS4J-NU 79
SK-93ERSD 76, 77, 78
SK-990AQ 14
SK-990BQ 14
SK-9HBC 80
SL-126-A24Q 94
SL-126LQ 95, 94
SL-126LQ/X 94
SL-126Q 94
SL-1301-BAQ/X 95
SL-1301-EAQ/X 95
SL-1301-SAQ/X 95
SL-1311-MA/A 96
SL-1311-MA/B 96
SL-1311-MA/C 96
SL-1311-MA/R 96
SL-1312-SA/B 96
SL-1312-SA/R 96
SL-1901-DAQ 94
SL-1901-JAQ 94
SLI 259A 124
SLI 762FP-ISS 123
SLI 762PP-ISS 123
SLI 820 123
SLI 820RA 123
SLI 840 122
SM-200Q/BR 103
SM-200Q/W 103
SM-204Q/BR 104
SM-204Q/W 104
SM-205Q/BR 104
SM-205Q/W 104
SM-206Q/BR 105
SM-206Q/W 105
SM-207-5LQ/BR 105
SM-207-5LQ/W 105
SM-207-5Q/BR 105
SM-207-5Q/W 105
SM-207Q/BR 105
SM-207Q/W 105
SM-216Q/BR 103
SM-216Q/GY 103
SM-217Q/W 103
SM-226L-3Q 107
SM-226LQ 107
SM-226R-3Q 107
SM-226RQ 107
SM-300Q/BR 103
SM-300Q/W 103
SM-4003-TQ/W 104
SM-4004-LQ/W 104
SM-4004-TQ/W 104
SM-407-5TQ/W 105
SM-4102-TQ/W 105
SM-4103-LQ/W 106
SM-4103-TQ/W 106
SM-4104-TQ/W 106
SM-4105-LQ/B 106
SM-4105-LQ/W 106
SM-4201-LQ 107
SM-4301-TQ/W 106
SM-4302-LQ/W 106
SM-4303-TQ/W 106
SM-431-TQ/B 104
SM-431-TQ/W 104
SM-433-TQ/B 103
SM-433-TQ/W 103
SM-4601-L3Q 107
SM-4601-LQ 107
SM-831 107
SM-841 107
SM-851 107
SM-852LQ 107
SR-1212-C2ALQ 100
SR-1212-C7ALQ 100
SR-2112-C7AQ/10 100
SR-2206-C5AQ 100
SR-2212-C5AQ 100
SR-5201R 124
SR-5220A 124
SR-5440A 124
SS-032Q/RD 102
SS-033Q/BK 102
SS-040Q/BR 102
SS-040Q/W 102
SS-051ME 124
SS-052B 124
SS-061LSN 124
SS-066TL 124
SS-072Q 102
SS-073Q 102
SS-074/BG 102
SS-075C-PEQ 102
SS-075CQ 102
SS-075Q 102
SS-076Q/GY 102
SS-076Q/SW 102
SS-077Q 102
SS-078-KEYQ 102
SS-078Q 102
SS-090 45
SS-090-1H0 45
SS-090KN 45
SS-095 45
SS-199Q 45
SS-202Q 102
SS-299Q 45
ST-1206-1.5AQ 98
ST-2406-10AQ 98
ST-2406-2AQ 98
ST-2406-3AQ 98
ST-2406-5AQ 98
ST-2406-7AQ 98
ST-BD01Q 97
ST-BL01Q 97
ST-BT02Q 97
ST-BT03Q 97
ST-LA108-TPQ 65
ST-LA115-TPQ 65
ST-LA130-TPQ 65
ST-UV12-S0.5Q 99
ST-UV12-S1.0Q 99
ST-UV12-S2.0Q 99
ST-UV12-S5.0Q 99
ST-UV16-W100Q 99
ST-UV16-W50Q 99
ST-UV24-W50Q 99
ST-UVDA-W100Q 99
ST-UVDA-W180Q 99
V
VA-1102B-WQ 72
VA-1104B-WQ 72
VA-2101B-WQ 72
VA-2404B-WQ 72
VC-1BAQ 71
VC-2VAQ 71
VC-3BAQ 71
VD-10BNA 121
VD-10PL 121
VD-20BNNAQ 121
VD-30BNNAQ 121
VD-30SSQ 121
VG-1C12BQ 73
VS-1AHHAQ 73, 112
VS-1V12BQ 73
VS-1V22AQ 73
W
WG-SD1Q 96
WG-SL1Q 96
X
X-187-037-1SC 124
X-930-096 80

SECO-LARM®

Manufacturer of ENFORCER®

16842 Millikan Avenue
Irvine, CA 92606
Phone: (800) 662-0800
(949) 261-2999
Fax: (949) 261-7326
Email: sales@seco-larm.com

2016 FULL CATALOG

Access Control • CCTV and Accessories • Wireless • Sensors
Burglar & Security • Audio & Video • Stand-Alone Security • Vehicle Security

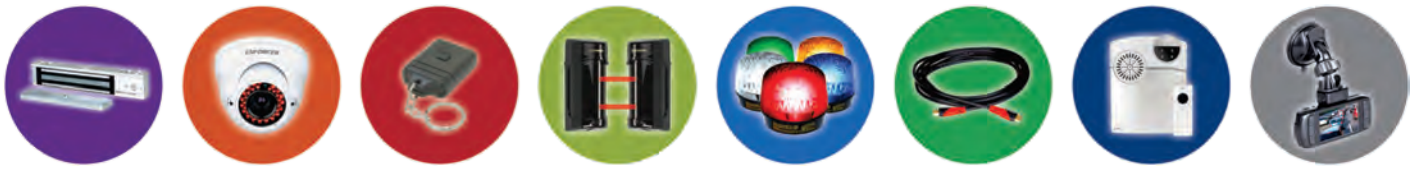

Manufacturers of reliable security systems and accessories since 1971.

CEA Consumer Electronics Association

AFA American Fence Association

2016 SIA

SECO-LARM's Security Systems and Accessories are protected by the following patents:

U.S. pat. nos. 7800644, 7164357, 6109110, 5760680, 5751072, 5739749, 5648754, 5483225, 5473305, 5298879, 5216407, 5084697, 4980666, 4975678, 4926160, 4835518, 4810998, 4761631, 4706064, 4700332, 4679033, 4550229, 4546629, 4543568, 4507945, D485774, D479708, D350494, D319196, D314791

Taiwan pat. nos. 158210, 133076, 118811, 116977, 105843, 100701, 94510, 89463, 86123, 84396, 76872, 75669, 66042, 61565, 59176, 56767, 52421, 50612, 46459, 43239, 40938, 40244, 39225, 37977, 37422, 35025, 33687, 33261, 33201, 32844, 32435, 32409, 31633, 30905, 30897, 30432, 30060, 28883, 28112, 26690, 24477, 23474, 22073, 21111, 20786, 20380, 19593, 18971, 17724, 16672, 16021, 15469, 14658, 12398, 11699, 9191,3724, M335856, M328028, M319465, 319309

U.K. pat. nos. 2279792, 2271009, 2215895, 2179482, 2177797, 2177529, 2141480, 2036522, 1041888

German pat. nos. 29600370.0, G9203004.1, G9203003.3, G9212809.2

Hungary pat. no. 85927 Sweden pat. no. 9202706.9

Japan pat. no. 1882619 Korea pat. nos. 35097, 32332

China pat. nos. ZL200720126532.5, ZL2006200113040.8, SZ03311103.0, ZL02305808.0, ZL97312768.6, ZL96249150.0, ZL95201587.0, ZL94300564.7

Other international patents are pending.

Copyright © 2016 SECO-LARM U.S.A., Inc. All rights reserved.
Trademarks are the property of SECO-LARM U.S.A., Inc. or their respective owners.

ISO 9001 Quality You Can Count On!

Anyone can talk about quality. But can they make sure the products you source offer consistent quality, order after order?

SECO-LARM's quality control management system is compliant with all the requirements of ISO 9001, the accepted measure of quality worldwide.

ISO 9001 is not another quality control theory. SECO-LARM's entire manufacturing process was probed in great detail by an independent quality system certification body, and was found compliant with internationally accepted quality standards.

A quality management system certified as ISO 9001 compliant ensures that SECO-LARM can deliver products that meet your quality requirements time and time again.
ISO 9001. World-class quality management from a world-class security manufacturer.

SLI® E® E®

ORDER PART#AD-CAT-EB-SLI
2016_SLI_FullCatalog_160527.indd