1 1/4" Outside Corner Cover & Base

PRODUCT SPECIFICATION

Package includes:

A. 1 1/4" Outside Corner Cover, 10 pcs
B. 1 1/4" Outside Corner Base, 10 pcs

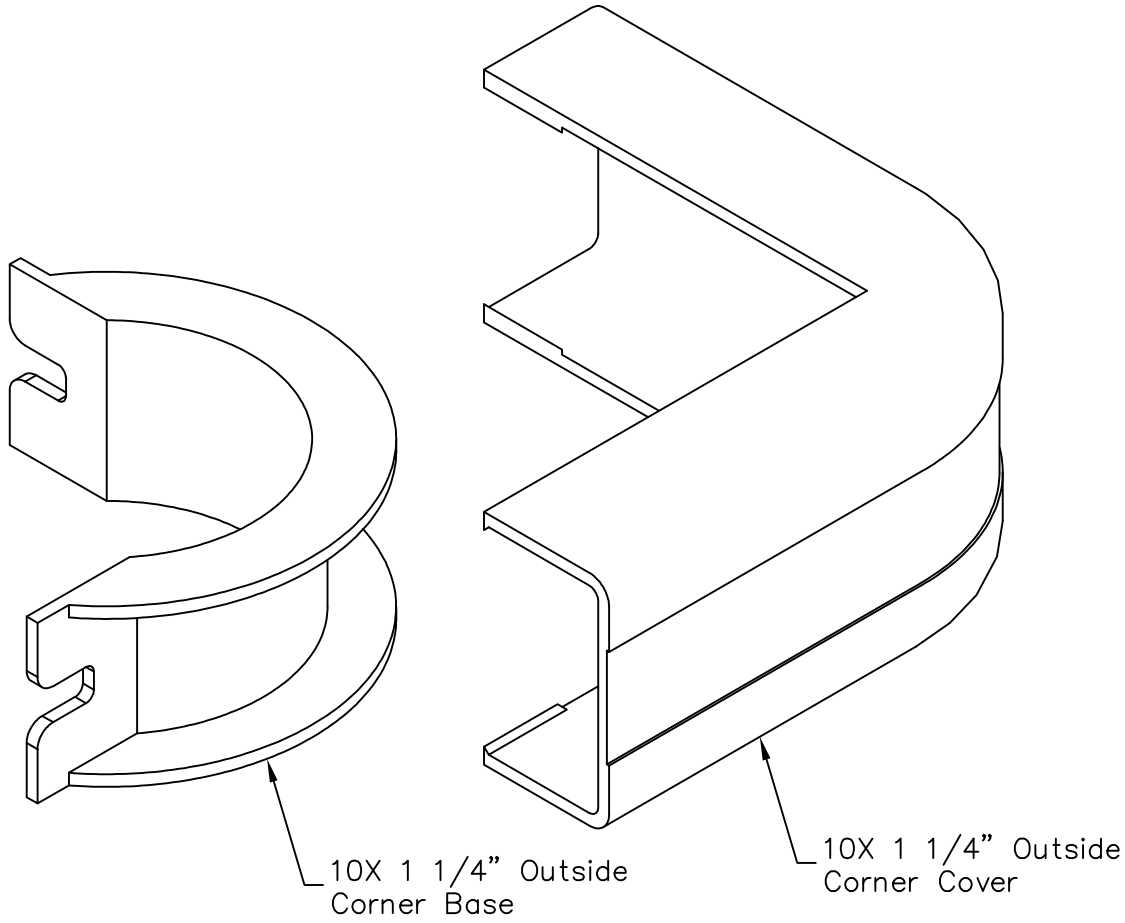

Features and Benefits:

- Designed to maintain cable bend radius
- Accommodates ICRW33R, ICRWR12S, and ICRWR128 1 1/4"W x 3/4"H raceway sections
- Available in ivory and white

OUTSIDE CORNER & BASE, 1 1/4", 10 PK			
ITEM NO.	ICRW120BXX	REV.	A
DWG NO.	PSRW120B00	PAGE NO.	1

Premium**Products** Proven**Performance** Competitive**Prices**

CUSTOMER CARE / TECHNICAL SUPPORT * CSR@ICC.COM / 888-ASK-4-ICC (275-4422) * 2100 E. Valencia Dr, Suite D, Fullerton, CA 92831 * www.icc.com

© 2015 ICC. THIS DOCUMENT AND THE DESIGNS, SPECIFICATIONS AND INFORMATION CONTAINED HEREIN ARE THE PROPERTY OF ICC. REPRODUCTION, MODIFICATION, ALTERATION, OR UNAUTHORIZED USE WITHOUT ICC'S APPROVAL IS STRICTLY PROHIBITED. ICC AND THE ICC LOGO ARE THE TRADENAME AND REGISTERED TRADEMARK OF ICC. ALL RIGHTS RESERVED.

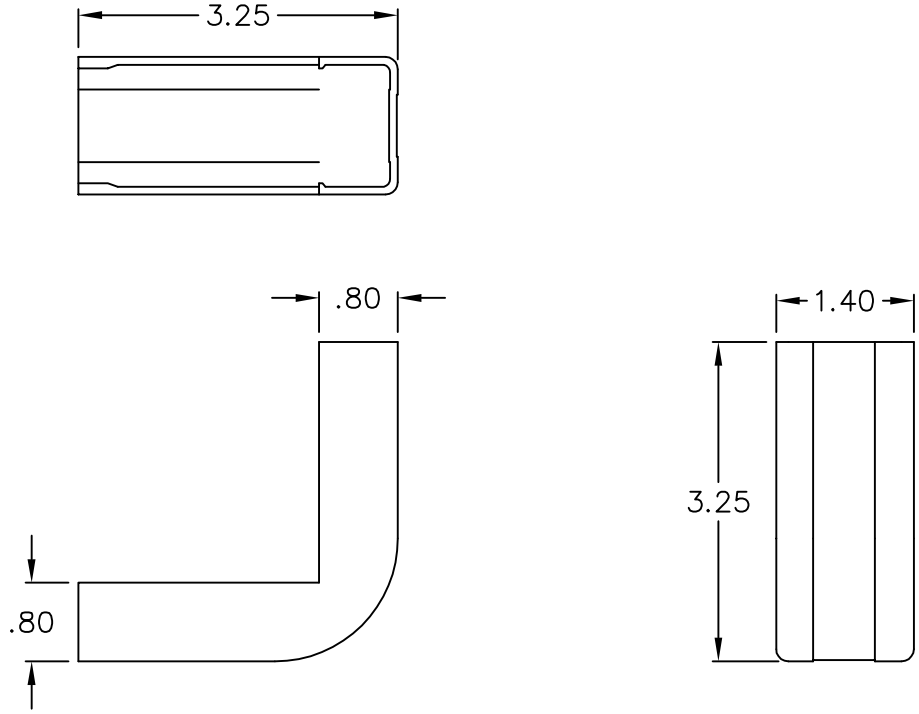

3/4" OUTSIDE CORNER COVER

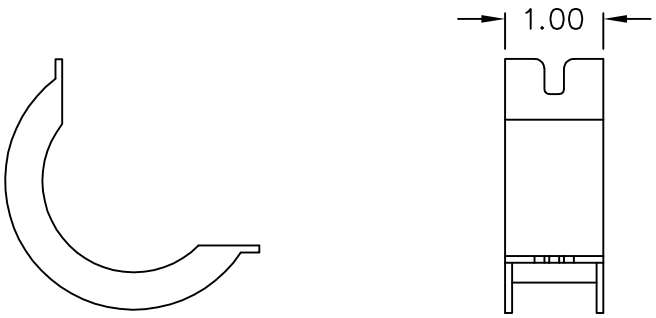

3/4" OUTSIDE CORNER BASE

NOTE: UNLESS OTHERWISE SPECIFIED

1. MATERIAL:
   A. OUTSIDE CORNER COVER: HIGH IMPACT STYRENE
   B. OUTSIDE CORNER BASE: HIGH IMPACT STYRENE
2. COLOR: XX: IV-IVORY & WH-WHITE

OUTSIDE CORNER & BASE, 1 1/4", 10 PK			
ITEM NO.	ICRW120BXX	REV. A	
DWG NO.	PSRW120B00	PAGE NO. 2	

*Premium**Products***
*Proven**Performance***
*Competitive**Prices***

CUSTOMER CARE / TECHNICAL SUPPORT * CSR@ICC.COM / 888-ASK-4-ICC (275-4422) * 2100 E. Valencia Dr, Suite D, Fullerton, CA 92831 * www.icc.com

© 2015 ICC. THIS DOCUMENT AND THE DESIGNS, SPECIFICATIONS AND INFORMATION CONTAINED HEREIN ARE THE PROPERTY OF ICC. REPRODUCTION, MODIFICATION, ALTERATION, OR UNAUTHORIZED USE WITHOUT ICC'S APPROVAL IS STRICTLY PROHIBITED. ICC AND THE ICC LOGO ARE THE TRADENAME AND REGISTERED TRADEMARK OF ICC. ALL RIGHTS RESERVED.