1 1/4" Ceiling Entry & Mounting Clip

PRODUCT SPECIFICATION

Package includes:

A. 1 1/4" Ceiling Entry, 1 pc
B. Mounting Clip, 1 pc

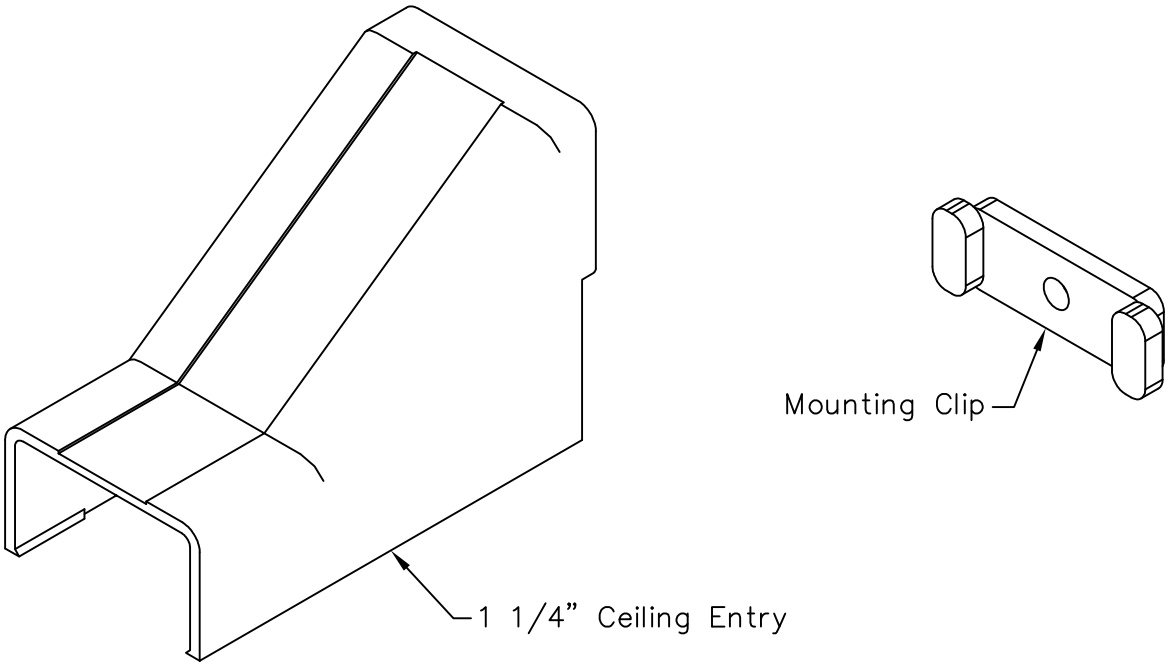

Features and Benefits:

- Designed to use for cables entering from the ceiling.
- Accommodates ICRW33R, ICRWR128, and ICRWR12S 1 1/4"W x 3/4"H raceway sections.
- Available in ivory and white.

CEILING ENTRY & CLIP, 1 1/4"			
ITEM NO.	ICRW33CMXX	REV.	A
DWG NO.	PSRW33CM00	PAGE NO.	1

Premium**Products** Proven**Performance** Competitive**Prices**

CUSTOMER CARE / TECHNICAL SUPPORT * CSR@ICC.COM / 888-ASK-4-ICC (275-4422) * 2100 E. Valencia Dr, Suite D, Fullerton, CA 92831 * www.icc.com

© 2015 ICC. THIS DOCUMENT AND THE DESIGNS, SPECIFICATIONS AND INFORMATION CONTAINED HEREIN ARE THE PROPERTY OF ICC. REPRODUCTION, MODIFICATION, ALTERATION, OR UNAUTHORIZED USE WITHOUT ICC'S APPROVAL IS STRICTLY PROHIBITED. ICC AND THE ICC LOGO ARE THE TRADENAME AND REGISTERED TRADEMARK OF ICC. ALL RIGHTS RESERVED.

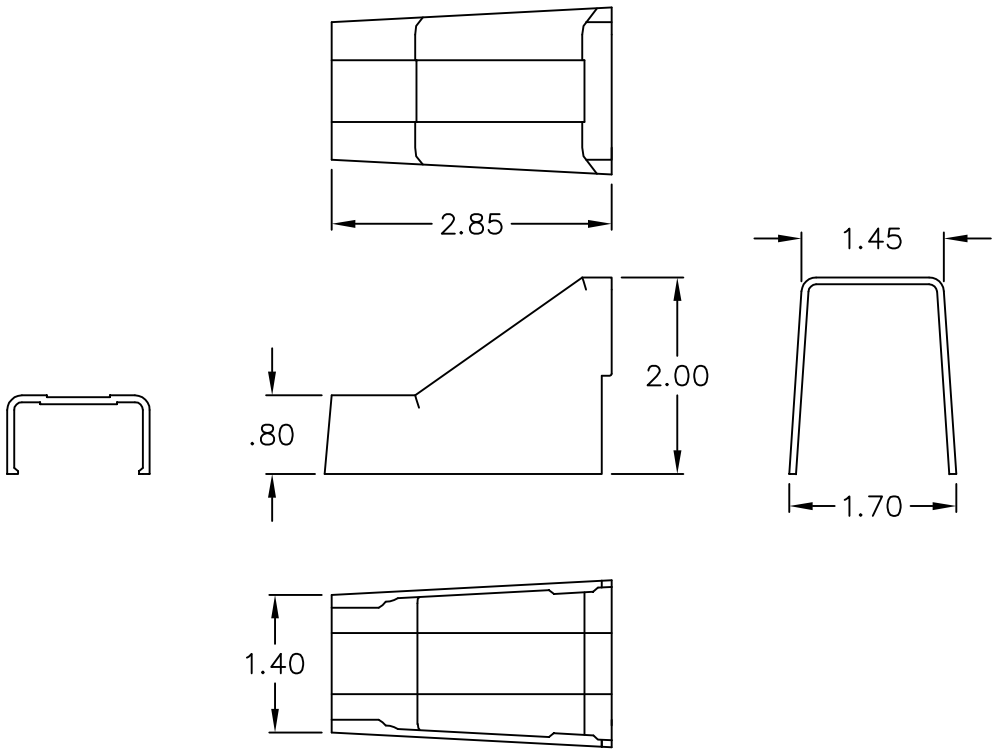

3/4" CEILING ENTRY

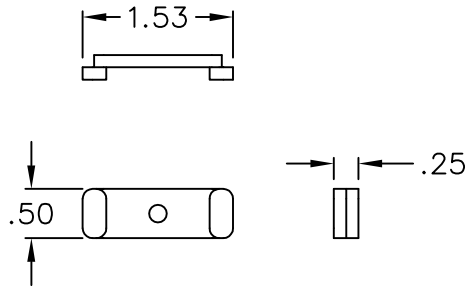

MOUNTING CLIP

NOTE: UNLESS OTHERWISE SPECIFIED

1. MATERIAL:
   A. CEILING ENTRY: HIGH IMPACT STYRENE
   B. MOUNTING CLIP: HIGH IMPACT STYRENE
2. COLOR: XX: IV-IVORY & WH-WHITE

CEILING ENTRY & CLIP, 1 1/4"			
ITEM NO.	ICRW33CMXX	REV.	A
DWG NO.	PSRW33CM00	PAGE NO.	2

*Premium**Products***
*Proven**Performance***
*Competitive**Prices***

CUSTOMER CARE / TECHNICAL SUPPORT * CSR@ICC.COM / 888-ASK-4-ICC (275-4422) * 2100 E. Valencia Dr, Suite D, Fullerton, CA 92831 * www.icc.com

© 2015 ICC. THIS DOCUMENT AND THE DESIGNS, SPECIFICATIONS AND INFORMATION CONTAINED HEREIN ARE THE PROPERTY OF ICC. REPRODUCTION, MODIFICATION, ALTERATION, OR UNAUTHORIZED USE WITHOUT ICC'S APPROVAL IS STRICTLY PROHIBITED. ICC AND THE ICC LOGO ARE THE TRADENAME AND REGISTERED TRADEMARK OF ICC. ALL RIGHTS RESERVED.