dotworkz systems

Versatile, Virtually Indestructible and Ready for the Extreme

Not just a camera enclosure but a engineered outdoor housing system that is designed to expand all indoor camera models into complete rugged outdoor system solutions.

Virtually Indestructible: We produce the worlds toughest enclosures, will not corrode, rust, leak and has proven to withstand a whole world of abuse.

No matter the climate we take outdoor temperature protection very serious: Extreme Hot climates, Cold climates, Marine and everywhere in between.

MVP

MULTI VOLT PLATFORM

- Universal input voltages option 220 VAC, 110 VAC and 24 VAC/VDC
- 24 VDC /12 VDC camera and component power
- Easier, faster installation process - less time
- Works with all cameras brands and models*

D3-HB : Dotworkz D2 Heater & Blower Camera Enclosure

Features:

- Thermostatically controlled Heater Blower System
- Virtually indestructible Polycarbonate Thermal Plastic alloy
- Designed to work with all brands of IP and analog PTZ cameras
- Internal bracket included for perfect fit for PTZ, megapixel or mini domes
- Switchable upper and lower camera mounting locations for maximum versatility and internal storage space
- Internal mounting space for: routers, cell networks, hard drives, UPS, WiMAX, mesh hardware, etc
- IP66 rated against dust, water and salt water air & IP68 water proof connection ports
- 60% bigger then our D2 models perfect for adding Wireless, camera and NVR as a single install system

Description:

The D3-HB-MVP is compatible with virtually every IP and analog PTZ camera on the market, now with MVP to work with all input and camera voltages. Made from impact resistant Polycarbonate Thermal Plastic.

The ultimate barrier to protect camera and other sensitive components. Heater & Blower is ideal in weather conditions ranging from 30F (-1°C) to 95F (35°C).

Designed for the cold, warm temperate climates.

Specs:

Operating Temperature (Absolute):
-25° to 140° F (-32° C to 60° C)
Operating Temperature (Recommended):
0° to 120°F (-17°C to 49°C)
Power Consumption:
2 amps @ 115 VAC typical at full load
Input Power Source options for MVP:
24VAC, 110 VAC, or 220 VAC
Outputs for Camera Power for MVP:
IP: 12VDC, 24VDC / AC (CCTV): 12VDC, 24VAC
Internal Power Available for Camera:
4 amps @ 12 VDC on typical model
Shipping: 22" x 13" x 16" - 13 lbs (5.9 Kg)

Standard with MVP
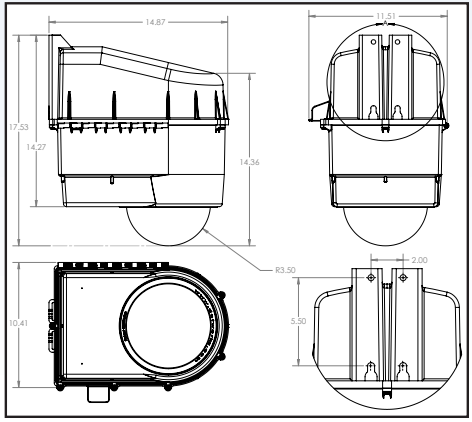
Engineered and Built in the US