High Performance 4 Channel Decoder for Full HD Resolution

4CH Video Decoder

SPD-400

The SPD-400 is a standalone 4 channel decoder which provides max. Full HD 1080p video output for a single view and max. HD 720p for quad view mode. It is able to receive audio and video streams from Samsung network cameras and encoders via an Ethernet network, decode and output them in real-time via its HDMI/VGA interface. 1 x 1080p images and 4 x 4CIF images can be displayed at 30fps enabling real-time monitoring.

- H.264, MPEG-4, MJPEG decoding
- Full HD (1080p) video output for single view
- Single and quad view support
- Sequence mode for multiple video sources

4CH Video Decoder

SPD-400

4CH | H.264 | 2M

Specifications

	SPD-400N	SPD-400P
OPERATIONAL		
Video Out	HDMI / VGA : Max. 1920 x 1080p 1920 x 1080p, 1680 x 1050, 1600 x 900, 1440 x 900, 1280 x 1024, 1280 x 720p, 1024 x 768	
	CVBS : 1.0 Vp-p / 75Ω composite 704 x 480	CVBS : 1.0 Vp-p / 75Ω composite 704 x 576
	HDMI / VGA, CVBS selectable	
Event Trigger	Alarm Input, IP camera event input	
Alarm I/O	Input 1ea / Output 2ea (Relay)	
NETWORK		
Ethernet	RJ-45 (10/100/1000BASE-T)	
Video Compression Format	H.264, MPEG-4, MJPEG	
Resolution	H.264 : Single view - up to 2M pixel / Quad view - up to 720p MPEG-4 : Single view - up to 4CIF / Quad view - Quad up to 4CIF MJPEG : Single vlew - up to 720p (except 800 x 600) / Quad vlew - up to 720p (except 800x600) 1920 x 1080p, 1280 x 1024, 1280 x 720p, 704 x 576, 704 x 480, 640 x 480, 352 x 288, 352 x 240, 320 x 240	
Max. Framerate	Max. 30fps at single view, Max. 120fps at 4 x 4CIF, Max. 60fps at 4 x 720p (No audio)	
Display	Single view, Quad view	
Audio I/O	Line out 1ea	
Audio Compression Format	G.711	
IP	IPv4, IPv6	
Protocol	TCP/IP, UDP/IP, RTP(UDP), RTP(TCP), NTP, HTTP, DHCP, ICMP, IGMP, ARP, SSL, DNS	
Security	HTTPS(SSL) login authentication, User access log	
Camera Registration	32 camera, 8 layout, 10 sequence	
Support Device	Samsung : SNB-7000/5000, SNV-3120/5080/5010, SND-5080(F) SNP-3430H/3120/3120V/3120VH, SPE-400/100, SPE-1600R/400B Axis : P3301, P3343, P3344, P1311, P1343, P1344, P1346, PTZ215, Q6032, Q7401, Q7404 (F/W ver : 5.x)	
	Stream (Live video / audio) : SVNP1.2, (RTP/RTSP : AXIS) Control / Network alarm : SNVP1.2	
Web Viewer	Supported OS : Windows XP Supported Browser : Internet Explorer 7.0 or Higher	
ENVIRONMENTAL		
Operating Temperature / Humidity	0°C ~ +40°C (+32°F ~ +104°F) / 0% ~ 90% RH	
ELECTRICAL		
Input Voltage / Current	12V DC	
Power Consumption	Max.10W	
MECHANICAL		
Color / Material	Silver / Metal	
Dimensions (WxHxD)	178.0 x 34.0 x 128.0mm (7.00" x 1.34" x 5.04")	
Weight	530g (1.17 lb)	

Dimensions

Unit : mm (inch)

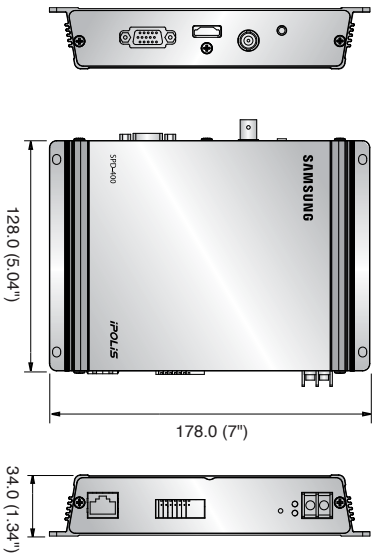

The Eco mark represents Samsung Techwin's will to create environment-friendly products,and indicates that the product satisfies the EU RoHS Directive.

Design and specifications are subject to change without notice.

SAMSUNG TECHWIN CO., LTD.
701, Sampyeong-dong, Bundang-gu, Seongnam-si, Gyeonggi-do Korea 463-400
Tel : +82-70-7147-8741~8749, 8752~8760 Fax : +82-31-8018-3745
www.samsung**ipolis**.com www.samsung**security**.com

SAMSUNG TECHWIN AMERICA Inc.
100 Challenger Rd. Suite 700 Ridgefield Park, NJ 07660
Toll Free : +1-877-213-1222 Direct : +1-201-325-6920
Fax : +1-201-373-0124
www.samsung**cctvusa**.com

SAMSUNG TECHWIN EUROPE LTD.
Samsung House, 1000 Hillswood Drive, Hillswood Business Park
Chertsey, Surrey, UNITED KINGDOM KT16 OPS
Tel : +44-1932-45-5300 Fax : +44-1932-45-5325

TIANJIN SAMSUNG TECHWIN OPTO-ELECTRONICS CO., LTD.
No.11 Wei 6 Street. Micro-Electronic Industrial Park
Jingang Road, Tianjin, P.R. CHINA 300385
Tel : +86-22-23887788 Fax : +86-22-23887788

■DISTRIBUTED BY