BOSCH
Invented for life

TC9200 Series Indoor Camera Mounts

- **Sturdy Construction**
- **Attractive Appearance**
- **Versatile Design**
- **Adjustable**
- **Wide Selection of Styles**
- **Lightweight**

The TC9200 Series Indoor Camera Mounts can be used with CCD cameras with fixed and varifocal lenses. These sturdy, attractive mounts have fully adjustable mount heads and standard 1/4-20 camera mounting bolts. Maximum load capability ranges from 2 kg (4.4 lb) to 10 kg (22 lb). These versatile models can be used as pedestal, wall, or ceiling mounts and are well suited for use with CCD cameras.

Functions

Model TC9200 is an economical 200 mm (8 in) general purpose mount for loads of up to 4 kg (8.8 lb). It has an aluminum finish and an adjustable sleeve ball mounting clamp for camera position adjustments.

A deluxe general purpose mount, the 200 mm (8 in) TC9201 can handle loads of up to 9 kg (20 lb) and has a glossy black finish. It features a lever type ball mounting clamp for quick and easy adjustments of camera position.

The TC9202 model is an extendible wall mount with a range of length from 244 mm to 414 mm (9.6 in to 16.3 in). It can accommodate loads of up to 10 kg (22 lb) in both the short and the fully extended configurations and features a quick release screw head for ease of camera positioning.

The right angle curve in the support arm of the TC9203 model mount can accommodate many difficult mounting requirements. A universal wall/ceiling mount, this model has a length of 230 mm (9.1 in) and can handle cameras of up to 10 kg (22 lb).

Model TC9205 is an economical 127 mm (5 in) general purpose mount which can handle loads of up to 2 kg (4.4 lb).This mount features an aluminum finish and an adjustable sleeve ball mounting clamp. The two mounting holes in the base flange allow for direct mounting to a standard electrical box (3 1/4-inch centers) and an opening in its hollow shaft permits a direct cable feed to the mounting head from the base to the camera.

The TC9206U indoor mount is configured for mounting cameras in indoor applications. It accommodates loads of up to 4.5 kg (10 lb) and is constructed of aluminum and steel, providing extremely rigid camera mounting.

An economical general purpose mount, the TC9207 model accommodates loads of up to 4 kg (8.8 lb). It utilizes a sleeve ball mounting clamp and comes in an aluminum finish with an off-white base flange.

Featuring threaded extensions, this unit can be configured to three different lengths and is easily installed with the included mounting hardware. This unit can be used with many model CCD cameras.

Installation/Configuration Notes

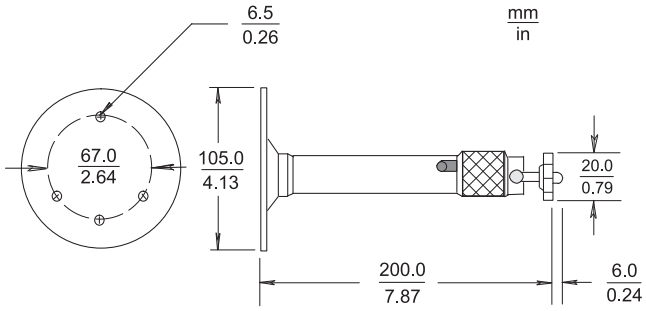

TC9200 Indoor Camera Mount

Maximum Load	4 kg (8.8 lb)
Mounting Head	Adjustable 360° pan, 90° tilt
Mounting Bolt	Standard 1/4-20
Finish	Aluminum
Weight	230 g (0.44 lb)

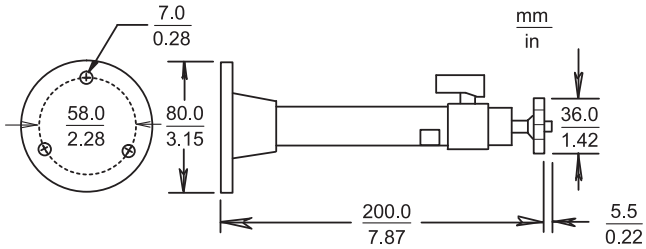

TC9201 Indoor Camera Mount

Maximum Load	9 kg (20 lb)
Mounting Head	Adjustable 360° pan, 90° tilt
Mounting Bolt	Standard 1/4-20
Finish	Gloss black
Weight	230 g (0.44 lb)

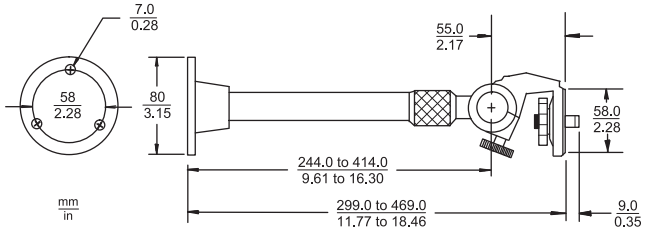

TC9202 Indoor Camera Mount

Maximum Load	10 kg (22 lb)
Mounting Head	Adjustable 360° pan, 90° tilt
Mounting Bolt	Standard 1/4-20
Finish	Aluminum and black
Weight	510 g (1.1 lb)

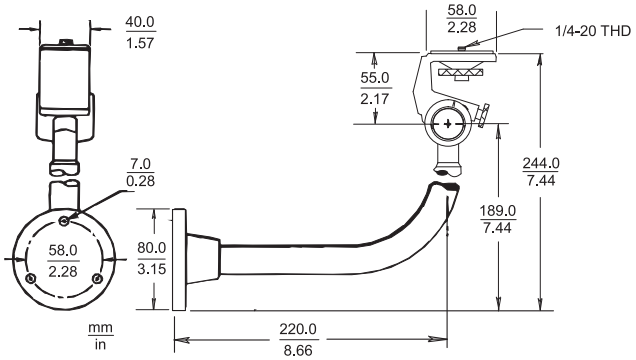

TC9203 Indoor Camera Mount

Maximum Load	10 kg (22 lb)
Mounting Head	Adjustable 360° pan,90° tilt
Mounting Bolt	Standard 1/4-20
Finish	Aluminum and black
Weight	460 g (1.0 lb)

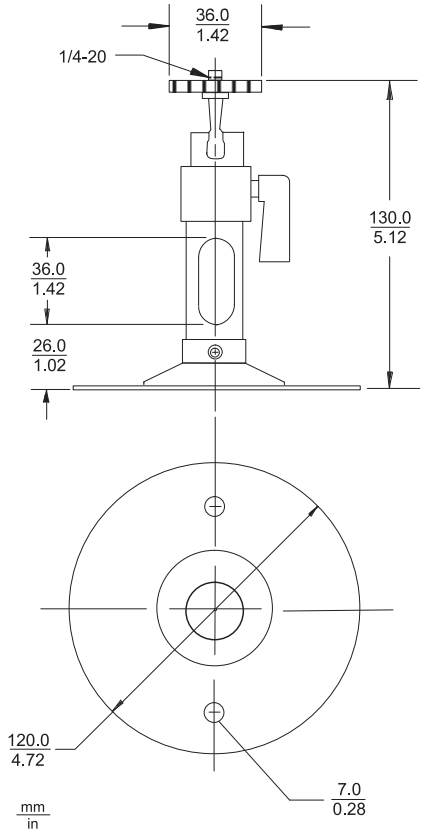

TC9205 Indoor Camera Mount

Maximum Load	2 kg (4.4 lb)
Mounting Head	Adjustable 360º pan, 90º tilt
Mounting Bolt	Standard 1/4-20
Finish	Aluminum
Weight	240 g (5.3 lb)

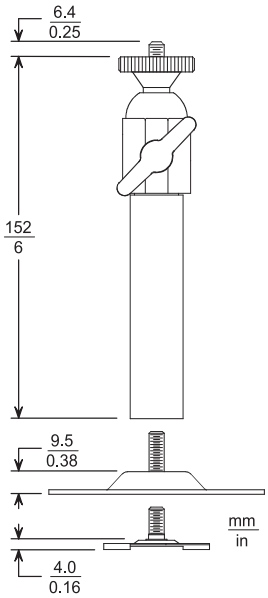

TC9206U Indoor Camera Mount

Maximum Load	4.5 kg (10 lb)
Mounting Head	Adjustable 360º pan, 180º tilt
Finish	Off-white semi-gloss acrylic
Weight:	
With Wall/Ceiling Flange	291 g (0.64 lb)
With T-Bar Clip	245 g (0.54 lb)

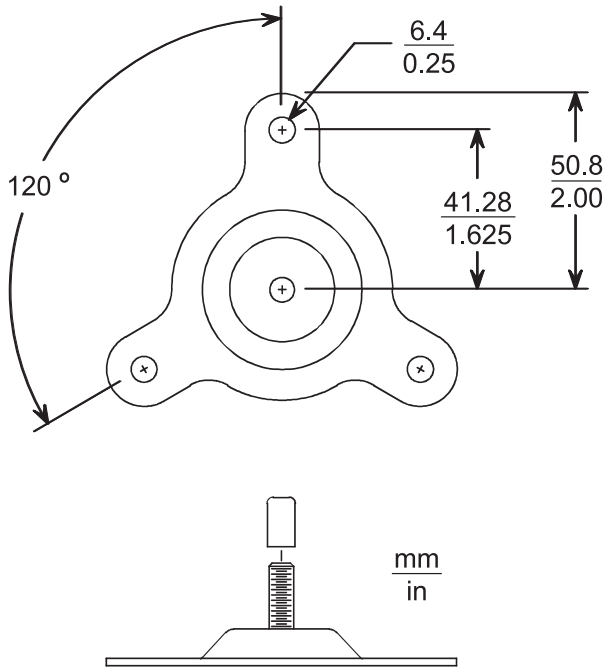

Wall/Ceiling Mount Flange, Included with TC9206U Solid Wall/Ceiling Mount

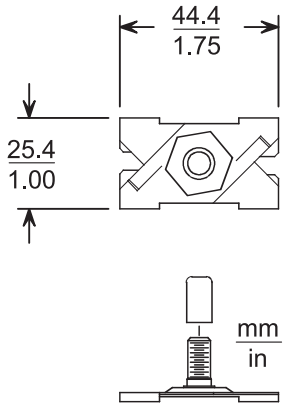

T-Bar Ceiling Clip

Included with TC9206 Suspended Ceiling Mount and TC9206U Solid Wall/Ceiling Mount.

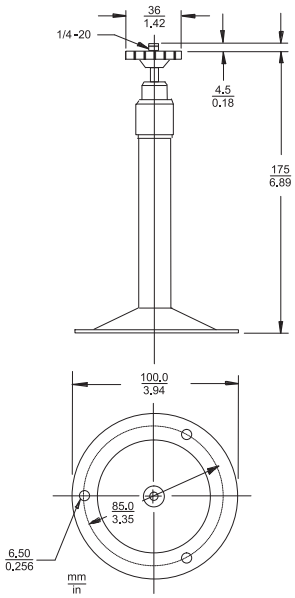

TC9207 Indoor Camera Mount

Maximum Load	4 kg (8.8 lb)
Finish	Aluminum with off-white flange
Mounting Head	Adjustable 360º pan, 90º tilt
Mounting Bolt	Standard 1/4-20
Weight	180 g (4 lb)

Ordering Information

TC9200 Indoor Camera Mount general purpose mount, for 8-inch, 4 kg (8.8 lb) max load, aluminum finish	**TC9200**
TC9201 Indoor Camera Mount deluxe general purpose mount, for 8-inch, 9 kg (20 lb) max load, black finish	**TC9201**
TC9202 Indoor Camera Mount extendible wall mount, for 9.6-inch to 16.3-inch, 10 kg (22 lb) max load, aluminium/black finish	**TC9202**
TC9203 Indoor Camera Mount universal wall/ceiling mount, right angle, 10 kg (22 lb) max load, aluminium/black finish	**TC9203**
TC9205 Indoor Camera Mount for 5-inch, 2 kg (4.4 lb) max load, aluminum finish	**TC9205**
TC9206U Indoor Camera Mount universal wall/ceiling grid, for 6-inch, 4.5 kg (10 lb) max load, off-white finish, incl. T-Bar ceiling clip and wall/ceiling mount flange	**TC9206U**
TC9207 Indoor Camera Mount for 7-inch, 4 kg (8.8 lb) max load, aluminum/off-white finish	**TC9207**

Americas:
Bosch Security Systems, Inc.
130 Perinton Parkway
Fairport, New York, 14450, USA
Phone: +1 800 289 0096
Fax: +1 585 223 9180
security.sales@us.bosch.com
www.boschsecurity.us

Europe, Middle East, Africa:
Bosch Security Systems B.V.
P.O. Box 80002
5600 JB Eindhoven, The Netherlands
Phone: + 31 40 2577 284
Fax: +31 40 2577 330
emea.securitysystems@bosch.com
www.boschsecurity.com

Asia-Pacific: **Represented by**
Robert Bosch (SEA) Pte Ltd, Security Systems
11 Bishan Street 21
Singapore 573943
Phone: +65 6571 2600
Fax: +65 6571 2698
apr.securitysystems@bosch.com
www.boschsecurity.com

© Bosch Security Systems Inc. 009 | Data subject to change without notice
T2426607371 | Cur: en-US, V7, 2 Dec 2009