GV-CAW220 2MP H.264 WDR Wireless Advanced Cube IP Camera

- 1/2.5" progressive scan CMOS
- Dual streams from H.264 and MJPEG
- Up to 30 fps at 1920 x 1080
- Passive infrared (PIR) sensor for detecting movement and activating the alarm LED
- Wireless connectivity: WiFi 802.11b/g/n
- Two-way audio
- Memory Card Slot
- Wide Dynamic Range (WDR)
- Defog
- Motion detection
- Tampering alarm
- Text overlay
- Privacy mask
- IP address filtering
- DC 5V
- Megapixel lens
- Smart device access
- 31 languages on Web interface
- ONVIF conformant

* No Memory Card Slot & local storage function for Argentina.

Active Tampering Alarm

Tampered

Focus Change

Camera Shift

Dimensions

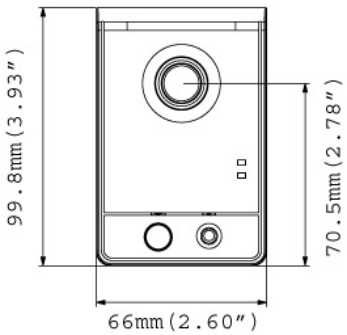

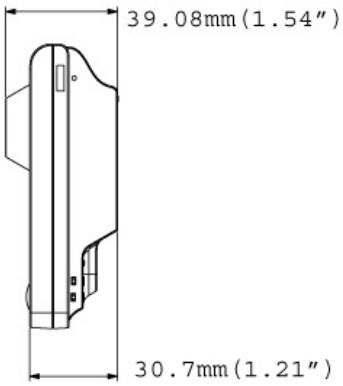

Specifications

Camera		
Image Sensor		1/2.5" progressive scan CMOS
Picture Elements		1920 (H) x 1080 (V)
Minimum Illumination	Color	1 Lux at F/2.4
	B/W	0.5 Lux at F/2.4
	LED ON	0.1 Lux at F/2.4
Shutter Speed		Automatic, Manual (1/5 ~ 1/8000 sec.)
White Balance		Automatic, Manual (2800 ~ 8500K)
Gain Control		Automatic
S/N Ratio		45 dB
Lens		
Megapixel		Yes
Day/Night		Yes (electronic)
Lens Type		Fixed
Focal Length		3.35 mm
Maximum Aperture		F/2.4
Mount		M12 mm
Image Format		1/3"
Operation	Focus	Fixed
	Zoom	
	Iris	
Operation		
Video Compression		H.264, MJPEG
Video Streaming		Dual streams from H.264 and MJPEG
Frame Rate		30 fps at 1920 x 1080 * The frame rate and performance may vary depending on the number of connections and data bitrates (different scenes).
Image Setting		Brightness, Contrast, Saturation, Sharpness, Gamma, White Balance, Flicker-less, Image Orientation, Shutter Speed, Backlight Compensation, WDR, Defog
Audio Compression		G.711
Two-way Audio		Yes
Video Resolution		
Main Stream	4:3	1600 x 1200, 1280 x 960, 640 x 480, 320 x 240
	16:9	1920 x 1080, 1280 x 720, 640 x 360, 448 x 252
	5:4	1280 x 1024, 640 x 512, 320 x 256
Sub Stream	4:3	640 x 480, 320 x 240
	16:9	640 x 360, 448 x 252
	5:4	640 x 512, 320 x 256
Network		
Interface		10/100 Ethernet
Protocol		HTTP, HTTPS, TCP, UDP, SMTP, FTP, DHCP, NTP, UPnP, DynDNS, 3GPP/ISMA, RTSP, PSIA, SNMP, QoS (DSCP), ONVIF
Wireless LAN		IEEE 802.11 b/g/n
Antenna Type		Built-in
Security		WEP, WPA-PSK(TKIP), WPA-PSK(AES), WPA2-PSK(TKIP), WPA2-PSK(AES)
Mechanical		
Temperature Detector		No
Connectors	Power	DC Jack
	Ethernet	RJ-45
	Audio	Built-in speaker & microphone
	Local Storage	Micro SD / SDHC / SDXC memory card slot (for Class 6 card or above)
LED Indicator		4 LEDs: Status x 3, LAN / Wi-Fi
PIR Sensor		Built-in
White Illumination LED		Yes
Max. PIR Sensor / White Illumination LED Distance		5 m (16.4 ft.)

General	
Environment Temperature	0 °C ~ 50 °C (32 °F ~ 122 °F)
Humidity	10% to 90% (no condensation)
Power Source	5V DC
Max. Power Consumption	6 W
Dimensions	65.8 x 99.8 x 39 mm (2.59 x 3.92 x 1.54”)
Weight	100 g (0.2 lb)
Regulatory	CE, FCC, C-Tick, RoHS compliant
Web Interface	
Installation Management	Web-based configuration
Maintenance	Firmware upgrade through Web Browser or Utility
Access from Web Browser	Camera live view, video recording, change video quality, bandwidth control, image snapshot, , audio, Picture in Picture, Picture and Picture, Privacy Mask, Tampering Alarm, Text Overlay
Language	Arabic / Bulgarian / Czech / Danish / Dutch / English / Finnish / French / German / Greek / Hebrew / Hungarian / Indonesian / Italian /Japanese / Lithuanian / Norwegian / Persian / Polish / Portuguese / Romanian / Russian / Serbian / Simplified Chinese / Slovakian / Slovenian / Spanish / Swedish / Thai / Traditional Chinese / Turkish
Applications	
Network Storage	GV-NVR, GV-System, GV-Backup Center, GV-Recording Server
Smart Device Access	GV-Eye for Android smartphone, tablet, iPhone, and iPod Touch GV-Eye HD for iPad
Live Viewing	IE, mobile phone
CMS Server support	GV-Control Center, GV-Center V2, GV-VSM

Note: Specifications are subject to change without notice.

Accessories

Name	Details
Power Adapter	Power adapters are available in 4 regions: U.S.A., Australia, U.K and Europe.