computar

MG1616KC-MP

f=16mm F1.6
for 2/3 type 5 Megapixel Cameras, Fixed-focal, Stepping Motor Iris
C-Mount

Model No.		MG1616KC-MP		Effective Lens Aperture	Front	φ21.9mm	
Focal Length		16mm			Rear	φ11.0mm	
Max. Aperture Ratio		1:1.6		Back Focal Length		13.3mm	
Max. Image Format		6.6mm x 8.8mm(φ11mm)		Flange Back Length		17.526mm	
Operation Range	Iris	F1.6 - F16C		Mount		C-Mount	
	Focus	1m - Inf.		Filter Size		M40.5 × 0.5	
	Zoom	–		Dimensions		φ42mm×57.8mm ×45mm	
Control	Iris	Stepping Motor		Weight		110 g	
	Focus	Manual					
	Zoom	–					
Angle of View	D	2/3 type	38.0°	1/2 type	28.1°	1/3 type	21.3°
	H		30.8°		22.7°		17.1°
	V		23.4°		17.1°		12.9°
Operating Temperature		−10℃ - +50℃					

Dimensions

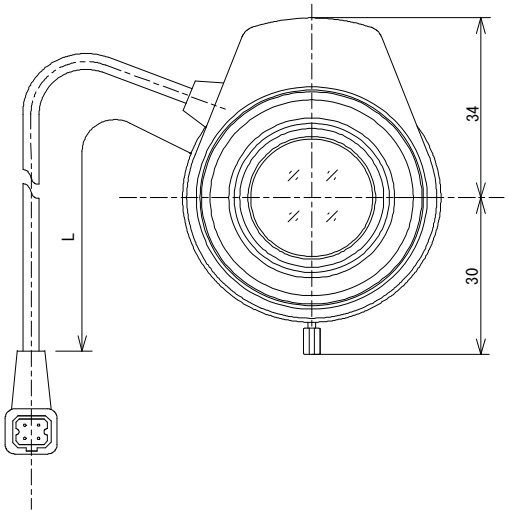

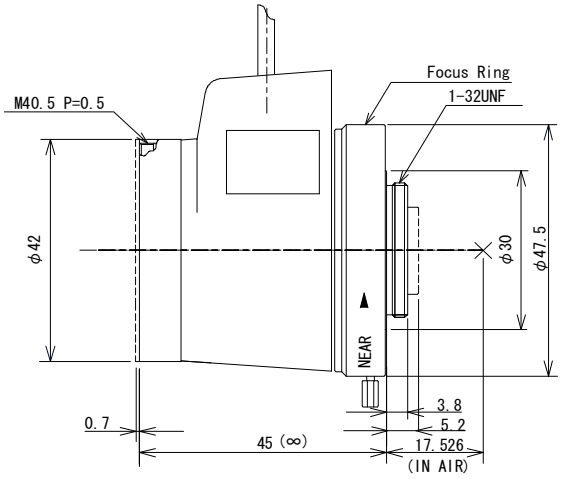

Wiring Diagram

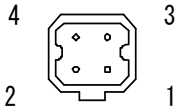

1	B
4	B-
2	A
3	A-