UBIQUITI NETWORKS

UniFi | AP OUTDOOR+

Enterprise WiFi System

Model: UAP-Outdoor+

Quick Start Guide

Introduction

Thank you for purchasing the Ubiquiti Networks™ UniFi™ Enterprise WiFi System. The UniFi Enterprise WiFi System includes the UniFi Controller software, which allows you to manage your wireless network using a web browser.

The UniFi Controller software and User Guide are available for download at **downloads.ubnt.com/unifi**

This Quick Start Guide includes the warranty terms and is for use with the UniFi AP Oudoor+, model UAP-Outdoor+. The UniFi AP can be powered by any of the following:

- PoE Adapter (included)
- 48V, PoE 802.3af compliant switch
- Ubiquiti Networks TOUGHSwitch PRO, model TS-8-PRO

The UniFi AP also includes the necessary hardware for mounting the unit on a wall or a pole.

Installation Requirements

- Flathead screwdriver (for pole-mounting)
- Drill and 6 mm drill bit (for wall-mounting)
- Phillips screwdriver
- Shielded Category 5 (or above) cabling should be used for all outdoor wired Ethernet connections and should be grounded through the AC ground of the PoE.

  We recommend that you protect your networks from brutal outdoor environments and devastating ESD attacks with industrial-grade shielded Ethernet cable from Ubiquiti Networks. For more details, visit **www.ubnt.com/toughcable**

TERMS OF USE: Ubiquiti radio devices must be professionally installed. Shielded Ethernet cable and earth grounding must be used as conditions of product warranty. TOUGHCable is designed for outdoor installations. It is the customer's responsibility to follow local country regulations, including operation within legal frequency channels, output power, and Dynamic Frequency Selection (DFS) requirements.

Package Contents

UniFi AP Outdoor+

Antennas (Qty. 2)

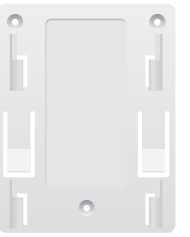

Wall Mount Bracket

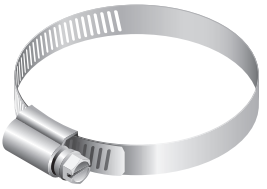

Metal Strap

Screws
(M2.9x20, Qty. 3)

Screw Anchors
(M3x20, Qty. 3)

PoE Adapter
(48V, 0.5A)

Power Cord

Quick Start
Guide

System Requirements

- Microsoft Windows Vista, Windows 7, Windows 8, or Mac OS X
- Java Runtime Environment 1.6 (or above)
- Web Browser: Mozilla Firefox, Google Chrome, or Microsoft Internet Explorer 8 (or above)

Network Topology Requirements

- A DHCP-enabled network for the AP to obtain an IP address (wireless clients will also obtain IP addresses after deployment)
- A management station computer running the UniFi Controller software, located either onsite and connected to the same Layer 2 network, or off-site in a cloud or NOC

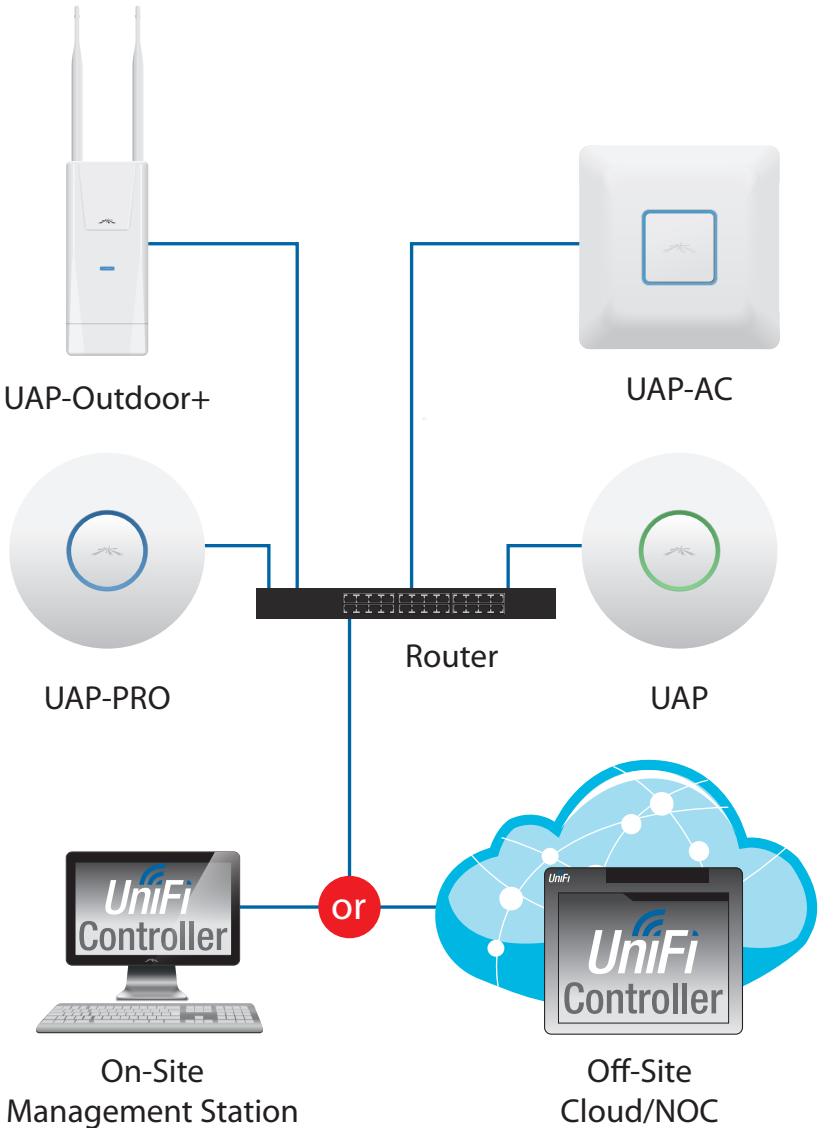

Sample Network Diagram

All UniFi APs support off-site management controllers. For setup details, refer to the User Guide on the website: **documentation.ubnt.com/unifi**

Hardware Overview

LED

LED Color	Status
Flashing White	Initializing.
Steady White	Factory default, waiting to be integrated.
Alternating White/Blue	Device is busy; do not touch or unplug it. This usually indicates that a process such as a firmware upgrade is taking place.
Quickly Flashing Blue	This is used to locate an AP. When you click **Locate** in the UniFi Controller software, the AP will flash. It will also display the location of the AP on the map.
Steady Blue	Indicates the device has been successfully integrated into a network and is working properly.
Steady Blue with occasional flashing	Indicates the device is in an isolated state (all WLANs are brought down until an uplink is found).

Ports

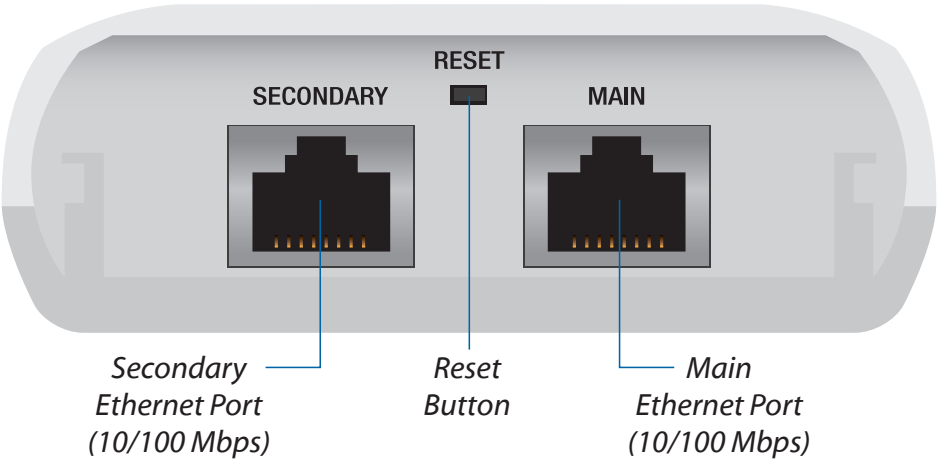

Secondary The *Secondary* Ethernet port is used for bridging.

Reset The *Reset* button serves two functions for the UniFi AP:

- **Restart** Press and release the *Reset* button quickly.
- **Restore to Factory Default Settings** Press and hold the *Reset* button for more then five seconds.

Main The *Main* Ethernet port is used to connect the power and should be connected to the LAN and DHCP server. Power can be provided by any of the following:

- Included PoE adapter
- 48V, 802.3af compliant switch
- Ubiquiti Networks TOUGHSwitch PRO, model TS-8-PRO

720-00028-01

Hardware Installation

The UniFi AP can be mounted to a wall or on a pole. Perform the steps for the appropriate installation:

Wall Mount

To mount the AP on a wall, use the included *Wall Mount Bracket*, *Screws*, and *Screw Anchors*.

1. Place the *Wall Mount Bracket* at the desired location on the wall, with the one screw hole pointed towards the ground.
2. Use a pencil to mark the three holes on the wall.
3. Use a 6 mm drill bit to drill the holes in the wall.
4. Insert a *Screw Anchor* into each hole.
5. Secure the *Wall Mount Bracket* to the wall with the self-tapping *Screws*.

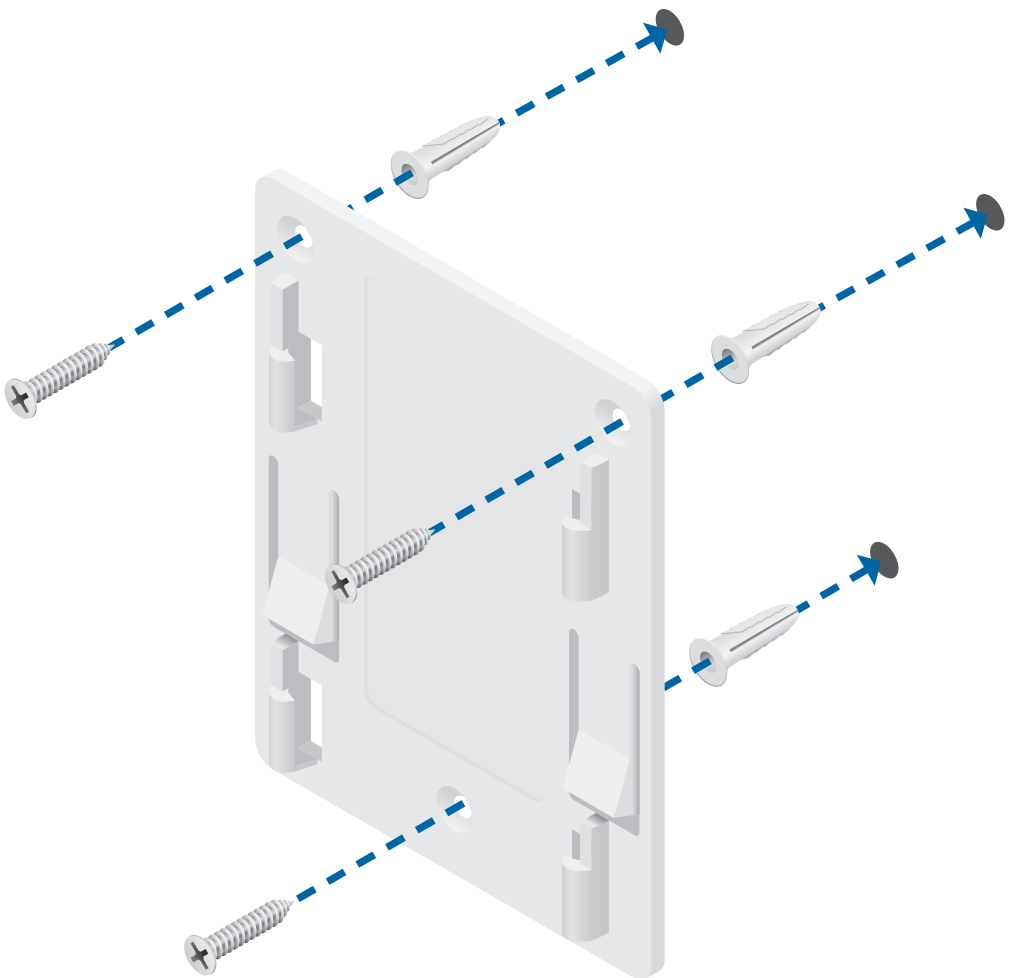

6. Align the mounting tabs on the UniFi AP with the notches on the *Wall Mount Bracket,* and slide the UniFi AP down until it locks into place.

Pole Mount

To mount the UniFi AP on a pole, use the included *Metal Strap*:

1. Turn the screw on the *Metal Strap* counter-clockwise to open the strap.

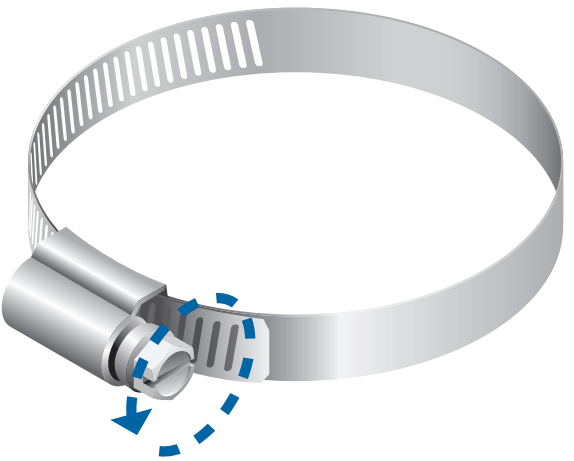

2. Straighten out the end of the *Metal Strap* and slide it through the back of the UniFi AP.

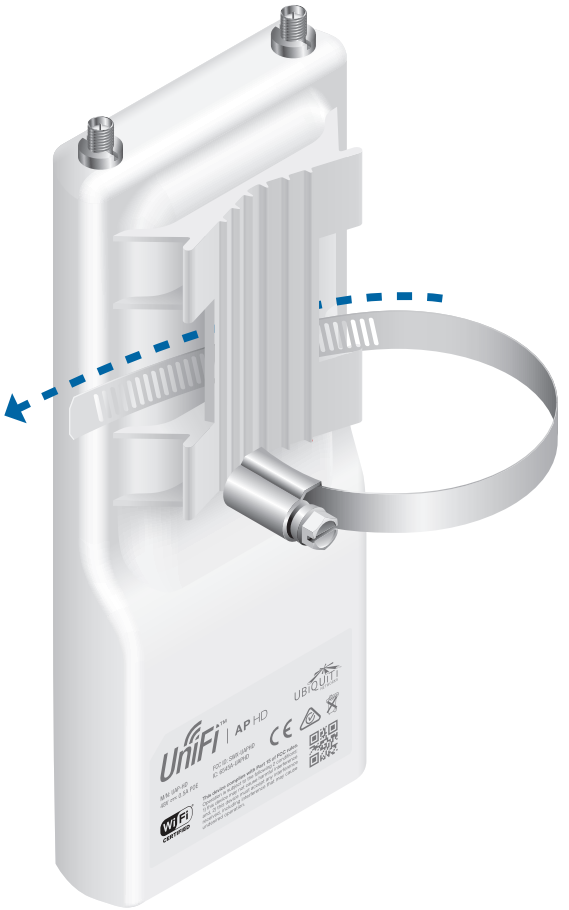

3. Wrap the *Metal Strap* around the pole. Use a flathead screwdriver to turn the screw clockwise and securely fasten the strap to the pole.

Antenna Installation

Connect each *Antenna* to a RP-SMA connector by rotating it clockwise.

Powering the UniFi AP

The UniFi AP can be powered by the included *PoE Adapter* or a compatible PoE switch.

1. Lift the locking tab of the *Port Cover* and slide the cover down to remove it.

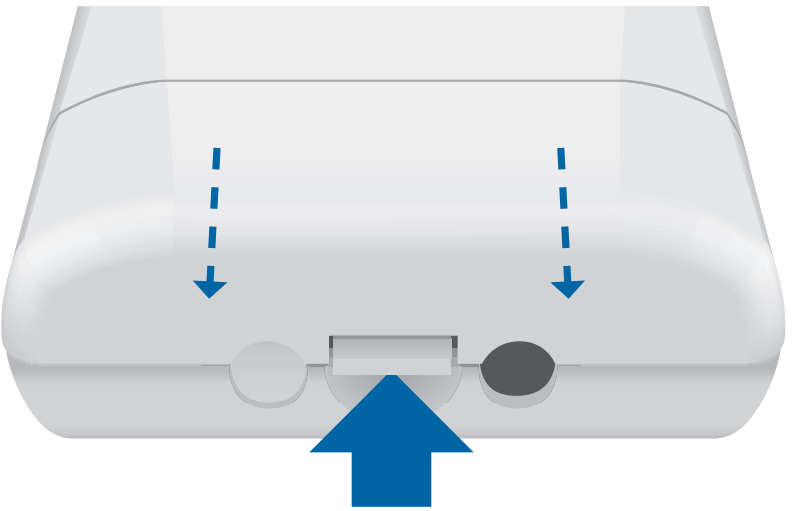

2. Connect an Ethernet cable to the *Main* port.

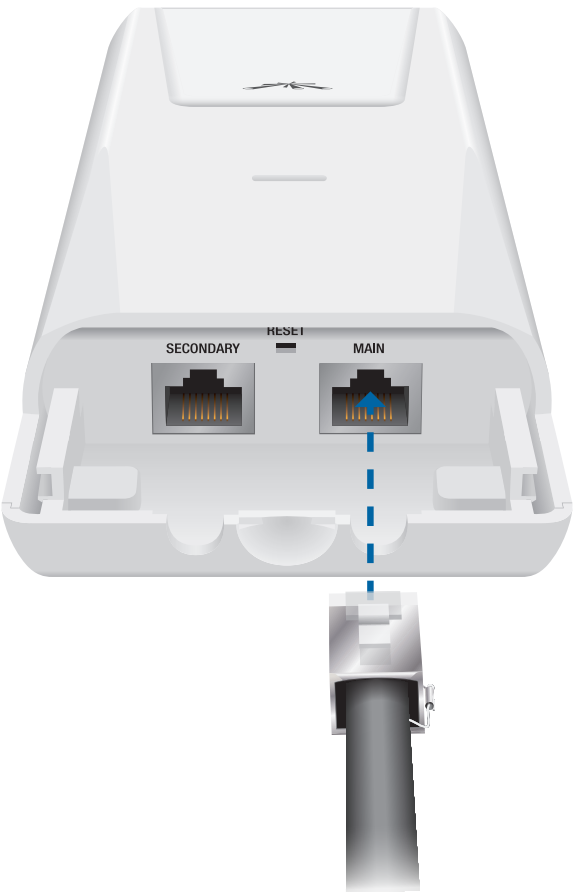

Connecting to the PoE Adapter

1. Connect the other end of the Ethernet cable to the Ethernet port labeled **POE** on the *PoE Adapter*.

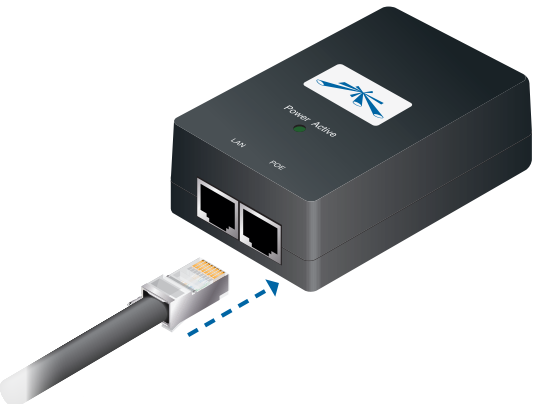

2. Connect an Ethernet cable from your LAN to the Ethernet port labeled **LAN** on the *PoE Adapter*.

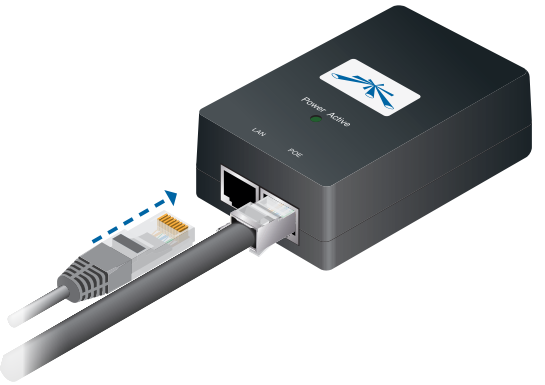

3. Connect the power cord the *PoE Adapter* and to a power outlet.

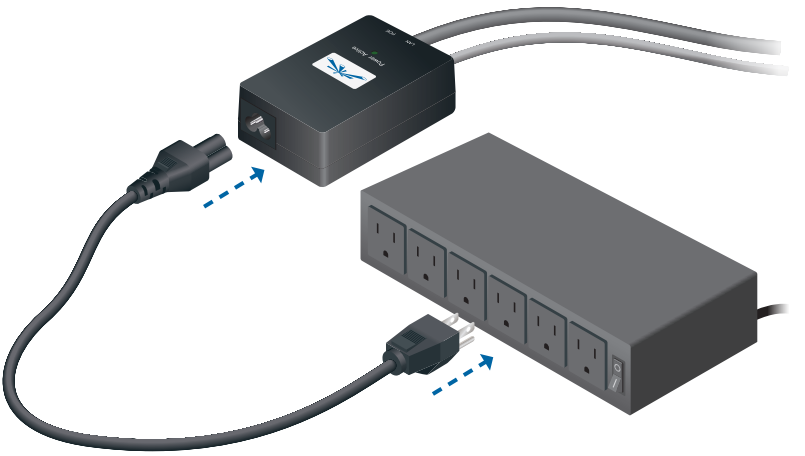

Connecting to a PoE Switch

Connect the other end of the Ethernet cable coming from the UniFi AP directly to a PoE port on one of the following:

- 48V, 802.3af compliant switch
- Ubiquiti Networks TOUGHSwitch PRO, model TS-8-PRO

TOUGHSwitch PRO Power Connection Diagram

Software Installation

Download and install the latest version of the UniFi Controller software at **downloads.ubnt.com/unifi** and follow the on-screen instructions.

After you have installed the software and run the UniFi Installation Wizard, a login screen will appear for the UniFi Controller management interface. Enter the Admin Name and Password that you created and click **Login**.

You can manage your wireless network and view network statistics using the UniFi Controller management interface. For information on using UniFi Controller, refer to the User Guide located on our website at **documentation.ubnt.com/unifi**

Specifications

UAP-Outdoor+	
Dimensions	205 x 83 x 37 mm
Weight	250 g
Networking Interface	(2) 10/100 Ethernet Ports
Buttons	Reset
Antennas	(2) 5 dBi Antennas
Wi-Fi Standards	802.11 b/g/n (2.4 GHz)
Power Method	PoE 802.3.af
Power Supply	48V, 0.5A PoE Adapter (Included)
Power Save	Supported
Max. Power Consumption	8 W
Max. TX Power	28 dBm
Wireless Security	WEP, WPA-PSK, WPA-TKIP, WPA2 AES, 802.11i
Certifications	CE, FCC, IC
Mounting	Wall/Pole (Kits Included)
ESD/EMP Protection	Air 24KV, Contact 24KV
Operating Temperature	-30 to 65° C
Operating Humidity	5 - 95% Condensing

Safety Notices

1. Read, follow, and keep these instructions.
2. Heed all warnings.
3. Only use attachments/accessories specified by the manufacturer.

WARNING: Do not use this product in location that can be submerged by water.

WARNING: Avoid using this product during an electrical storm. There may be a remote risk of electric shock from lightning.

Electrical Safety Information

1. Compliance is required with respect to voltage, frequency, and current requirements indicated on the manufacturer's label. Connection to a different power source than those specified may result in improper operation, damage to the equipment or pose a fire hazard if the limitations are not followed.
2. There are no operator serviceable parts inside this equipment. Service should be provided only by a qualified service technician.
3. This equipment is provided with a detachable power cord which has an integral safety ground wire intended for connection to a grounded safety outlet.
    a. Do not substitute the power cord with one that is not the provided approved type. Never use an adapter plug to connect to a 2-wire outlet as this will defeat the continuity of the grounding wire.
    b. The equipment requires the use of the ground wire as a part of the safety certification, modification or misuse can provide a shock hazard that can result in serious injury or death.
    c. Contact a qualified electrician or the manufacturer if there are questions about the installation prior to connecting the equipment.
    d. Protective earthing is provided by Listed AC adapter. Building installation shall provide appropriate short-circuit backup protection.
    e. Protective bonding must be installed in accordance with local national wiring rules and regulations.

Limited Warranty

UBIQUITI NETWORKS, Inc ("UBIQUITI NETWORKS") warrants that the product(s) furnished hereunder (the "Product(s)") shall be free from defects in material and workmanship for a period of one (1) year from the date of shipment by UBIQUITI NETWORKS under normal use and operation. UBIQUITI NETWORKS' sole and exclusive obligation and liability under the foregoing warranty shall be for UBIQUITI NETWORKS, at its discretion, to repair or replace any Product that fails to conform to the above warranty during the above warranty period. The expense of removal and reinstallation of any Product is not included in this warranty. The warranty period of any repaired or replaced Product shall not extend beyond its original term.

Warranty Conditions

The above warranty does not apply if the Product:

(I) has been modified and/or altered, or an addition made thereto, except by Ubiquiti Networks, or Ubiquiti Networks' authorized representatives, or as approved by Ubiquiti Networks in writing;

(II) has been painted, rebranded or physically modified in any way;

(III) has been damaged due to errors or defects in cabling;

(IV) has been subjected to misuse, abuse, negligence, abnormal physical, electromagnetic or electrical stress, including lightning strikes, or accident;

(V) has been damaged or impaired as a result of using third party firmware;

(VI) has no original Ubiquiti MAC label, or is missing any other original Ubiquiti label(s); or

(VII) has not been received by Ubiquiti within 30 days of issuance of the RMA.

In addition, the above warranty shall apply only if: the product has been properly installed and used at all times in accordance, and in all material respects, with the applicable Product documentation; all Ethernet cabling runs use CAT5 (or above), and for outdoor installations, shielded Ethernet cabling is used, and for indoor installations, indoor cabling requirements are followed.

Returns

No Products will be accepted for replacement or repair without obtaining a Return Materials Authorization (RMA) number from UBIQUITI NETWORKS during the warranty period, and the Products being received at UBIQUITI NETWORKS' facility freight prepaid in accordance with the RMA process of UBIQUITI NETWORKS. Products returned without an RMA number will not be processed and will be returned freight collect or subject to disposal. Information on the RMA process and obtaining an RMA number can be found at: **www.ubnt.com/support/warranty**.

Disclaimer

EXCEPT FOR ANY EXPRESS WARRANTIES PROVIDED HEREIN, UBIQUITI NETWORKS, ITS AFFILIATES, AND ITS AND THEIR THIRD PARTY DATA, SERVICE, SOFTWARE AND HARDWARE PROVIDERS HEREBY DISCLAIM AND MAKE NO OTHER REPRESENTATION OR WARRANTY OF ANY KIND, EXPRESS, IMPLIED OR STATUTORY, INCLUDING, BUT NOT LIMITED TO, REPRESENTATIONS, GUARANTEES, OR WARRANTIES OF MERCHANTABILITY, ACCURACY, QUALITY OF SERVICE OR RESULTS, AVAILABILITY, SATISFACTORY QUALITY, LACK OF VIRUSES, QUIET ENJOYMENT, FITNESS FOR A PARTICULAR PURPOSE AND NON-INFRINGEMENT AND ANY WARRANTIES ARISING FROM ANY COURSE OF DEALING, USAGE OR TRADE PRACTICE IN CONNECTION WITH SUCH PRODUCTS AND SERVICES. BUYER ACKNOWLEDGES THAT NEITHER UBIQUITI NETWORKS NOR ITS THIRD PARTY PROVIDERS CONTROL BUYER'S EQUIPMENT OR THE TRANSFER OF DATA OVER COMMUNICATIONS FACILITIES, INCLUDING THE INTERNET, AND THAT THE PRODUCTS AND SERVICES MAY BE SUBJECT TO LIMITATIONS, INTERRUPTIONS, DELAYS, CANCELLATIONS AND OTHER PROBLEMS INHERENT IN THE USE OF COMMUNICATIONS FACILITIES. UBIQUITI NETWORKS, ITS AFFILIATES AND ITS AND THEIR THIRD PARTY PROVIDERS ARE NOT RESPONSIBLE FOR ANY INTERRUPTIONS, DELAYS, CANCELLATIONS, DELIVERY FAILURES, DATA LOSS, CONTENT CORRUPTION, PACKET LOSS, OR OTHER DAMAGE RESULTING FROM ANY OF THE FOREGOING. In addition, UBIQUITI NETWORKS does not warrant that the operation of the Products will be error-free or that operation will be uninterrupted. In no event shall UBIQUITI NETWORKS be responsible for damages or claims of any nature or description relating to system performance, including coverage, buyer's selection of products (including the Products) for buyer's application and/or failure of products (including the Products) to meet government or regulatory requirements.

Limitation of Liability

EXCEPT TO THE EXTENT PROHIBITED BY LOCAL LAW, IN NO EVENT WILL UBIQUITI OR ITS SUBSIDIARIES, AFFILIATES OR SUPPLIERS BE LIABLE FOR DIRECT, SPECIAL, INCIDENTAL, CONSEQUENTIAL OR OTHER DAMAGES (INCLUDING LOST PROFIT, LOST DATA, OR DOWNTIME COSTS), ARISING OUT OF THE USE, INABILITY TO USE, OR THE RESULTS OF USE OF THE PRODUCT, WHETHER BASED IN WARRANTY, CONTRACT, TORT OR OTHER LEGAL THEORY, AND WHETHER OR NOT ADVISED OF THE POSSIBILITY OF SUCH DAMAGES.

Note

Some countries, states and provinces do not allow exclusions of implied warranties or conditions, so the above exclusion may not apply to you. You may have other rights that vary from country to country, state to state, or province to province. Some countries, states and provinces do not allow the exclusion or limitation of liability for incidental or consequential damages, so the above limitation may not apply to you. EXCEPT TO THE EXTENT ALLOWED BY LOCAL LAW, THESE WARRANTY TERMS DO NOT EXCLUDE, RESTRICT OR MODIFY, AND ARE IN ADDITION TO, THE MANDATORY STATUTORY RIGHTS APPLICABLE TO THE LICENSE OF ANY SOFTWARE (EMBEDDED IN THE PRODUCT) TO YOU. The United Nations Convention on Contracts for the International Sale of Goods shall not apply to any transactions regarding the sale of the Products.

Compliance

FCC

Changes or modifications not expressly approved by the party responsible for compliance could void the user's authority to operate the equipment.

This device complies with Part 15 of the FCC Rules. Operation is subject to the following two conditions:

1. This device may not cause harmful interference, and
2. This device must accept any interference received, including interference that may cause undesired operation.

NOTE: This equipment has been tested and found to comply with the limits for a Class A digital device, pursuant to part 15 of the FCC Rules. These limits are designed to provide reasonable protection against harmful interference when the equipment is operated in a commercial environment. This equipment generates, uses, and can radiate radio frequency energy and, if not installed and used in accordance with the instruction manual, may cause harmful interference to radio communications. Operations of this equipment in a residential area is likely to cause harmful interference in which case the user will be required to correct the interference at his own expense.

For MPE and antenna usage details, please visit our website at **www.ubnt.com/products**

Industry Canada

This Class A digital apparatus complies with Canadian ICES-003.

To reduce potential radio interference to other users, the antenna type and its gain should be so chosen that the equivalent isotropically radiated power (e.i.r.p.) is not more than that permitted for successful communication.

This device complies with Industry Canada licence-exempt RSS standard(s). Operation is subject to the following two conditions:

1. This device may not cause interference, and
2. This device must accept any interference, including interference that may cause undesired operation of the device.

Cet appareil numérique de la classe A est conforme à la norme NMB-003 Canada.

Pour réduire le risque d'interférence aux autres utilisateurs, le type d'antenne et son gain doivent être choisies de façon que la puissance isotrope rayonnée équivalente (PIRE) ne dépasse pas ce qui est nécessaire pour une communication réussie.

Cet appareil est conforme à la norme RSS Industrie Canada exempts de licence norme(s). Son fonctionnement est soumis aux deux conditions suivantes:

1. Cet appareil ne peut pas provoquer d'interférences et
2. Cet appareil doit accepter toute interférence, y compris les interférences qui peuvent causer un mauvais fonctionnement du dispositif.

RF Exposure Warning

The antennas used for this transmitter must be installed to provide a separation distance of at least 20 cm from all persons and must not be located or operating in conjunction with any other antenna or transmitter.

Les antennes utilisées pour ce transmetteur doivent être installé en considérant une distance de séparation de toute personnes d'au moins 20 cm et ne doivent pas être localisé ou utilisé en conflit avec tout autre antenne ou transmetteur.

CE Marking

CE marking on this product represents the product is in compliance with all directives that are applicable to it.

CE

RoHS/WEEE Compliance Statement

English

European Directive 2002/96/EC requires that the equipment bearing this symbol on the product and/or its packaging must not be disposed of with unsorted municipal waste. The symbol indicates that this product should be disposed of separately from regular household waste streams. It is your responsibility to dispose of this and other electric and electronic equipment via designated collection facilities appointed by the government or local authorities. Correct disposal and recycling will help prevent potential negative consequences to the environment and human health. For more detailed information about the disposal of your old equipment, please contact your local authorities, waste disposal service, or the shop where you purchased the product.

Deutsch

Die Europäische Richtlinie 2002/96/EC verlangt, dass technische Ausrüstung, die direkt am Gerät und/oder an der Verpackung mit diesem Symbol versehen ist, nicht zusammen mit unsortiertem Gemeindeabfall entsorgt werden darf. Das Symbol weist darauf hin, dass das Produkt von regulärem Haushaltmüll getrennt entsorgt werden sollte. Es liegt in Ihrer Verantwortung, dieses Gerät und andere elektrische und elektronische Geräte über die dafür zuständigen und von der Regierung oder örtlichen Behörden dazu bestimmten Sammelstellen zu entsorgen. Ordnungsgemäßes Entsorgen und Recyceln trägt dazu bei, potentielle negative Folgen für Umwelt und die menschliche Gesundheit zu vermeiden. Wenn Sie weitere Informationen zur Entsorgung Ihrer Altgeräte benötigen, wenden Sie sich bitte an die örtlichen Behörden oder städtischen Entsorgungsdienste oder an den Händler, bei dem Sie das Produkt erworben haben.

Español

La Directiva 2002/96/CE de la UE exige que los equipos que lleven este símbolo en el propio aparato y/o en su embalaje no deben eliminarse junto con otros residuos urbanos no seleccionados. El símbolo indica que el producto en cuestión debe separarse de los residuos domésticos convencionales con vistas a su eliminación. Es responsabilidad suya desechar este y cualesquiera otros aparatos eléctricos y electrónicos a través de los puntos de recogida que ponen a su disposición el gobierno y las autoridades locales. Al desechar y reciclar correctamente estos aparatos estará contribuyendo a evitar posibles consecuencias negativas para el medio ambiente y la salud de las personas. Si desea obtener información más detallada sobre la eliminación segura de su aparato usado, consulte a las autoridades locales, al servicio de recogida y eliminación de residuos de su zona o pregunte en la tienda donde adquirió el producto.

Français

La directive européenne 2002/96/CE exige que l'équipement sur lequel est apposé ce symbole sur le produit et/ou son emballage ne soit pas jeté avec les autres ordures ménagères. Ce symbole indique que le produit doit être éliminé dans un circuit distinct de celui pour les déchets des ménages. Il est de votre responsabilité de jeter ce matériel ainsi que tout autre matériel électrique ou électronique par les moyens de collecte indiqués par le gouvernement et les pouvoirs publics des collectivités territoriales. L'élimination et le recyclage en bonne et due forme ont pour but de lutter contre l'impact néfaste potentiel de ce type de produits sur l'environnement et la santé publique. Pour plus d'informations sur le mode d'élimination de votre ancien équipement, veuillez prendre contact avec les pouvoirs publics locaux, le service de traitement des déchets, ou l'endroit où vous avez acheté le produit.

Italiano

La direttiva europea 2002/96/EC richiede che le apparecchiature contrassegnate con questo simbolo sul prodotto e/o sull'imballaggio non siano smaltite insieme ai rifiuti urbani non differenziati. Il simbolo indica che questo prodotto non deve essere smaltito insieme ai normali rifiuti domestici. È responsabilità del proprietario smaltire sia questi prodotti sia le altre apparecchiature elettriche ed elettroniche mediante le specifiche strutture di raccolta indicate dal governo o dagli enti pubblici locali. Il corretto smaltimento ed il riciclaggio aiuteranno a prevenire conseguenze potenzialmente negative per l'ambiente e per la salute dell'essere umano. Per ricevere informazioni più dettagliate circa lo smaltimento delle vecchie apparecchiature in Vostro possesso, Vi invitiamo a contattare gli enti pubblici di competenza, il servizio di smaltimento rifiuti o il negozio nel quale avete acquistato il prodotto.

Declaration of Conformity

Česky [Czech]	UBIQUITI NETWORKS tímto prohla uje, e tento UBIQUITI NETWORKS device, je ve shod se základními po adavky a dal ími p íslu n mi ustanoveními sm rnice 1999/5/ES.
Dansk [Danish]	Undertegnede UBIQUITI NETWORKS erklærer herved, at følgende udstyr UBIQUITI NETWORKS device, overholder de væsentlige krav og øvrige relevante krav i direktiv 1999/5/EF.
Nederlands [Dutch]	Hierbij verklaart UBIQUITI NETWORKS dat het toestel UBIQUITI NETWORKS device, in overeenstemming is met de essentiële eisen en de andere relevante bepalingen van richtlijn 1999/5/EG. Bij deze verklaart UBIQUITI NETWORKS dat deze UBIQUITI NETWORKS device, voldoet aan de essentiële eisen en aan de overige relevante bepalingen van Richtlijn 1999/5/EC.
English	Hereby, UBIQUITI NETWORKS, declares that this UBIQUITI NETWORKS device, is in compliance with the essential requirements and other relevant provisions of Directive 1999/5/EC.
Eesti [Estonian]	Käesolevaga kinnitab UBIQUITI NETWORKS seadme UBIQUITI NETWORKS device, vastavust direktiivi 1999/5/EÜ põhinõuetele ja nimetatud direktiivist tulenevatele teistele asjakohastele sätetele.
Suomi [Finnish]	UBIQUITI NETWORKS vakuuttaa täten että UBIQUITI NETWORKS device, tyyppinen laite on direktiivin 1999/5/EY oleellisten vaatimusten ja sitä koskevien direktiivin muiden ehtojen mukainen.
Français [French]	Par la présente UBIQUITI NETWORKS déclare que l'appareil UBIQUITI NETWORKS, device est conforme aux exigences essentielles et aux autres dispositions pertinentes de la directive 1999/5/CE.
Deutsch [German]	Hiermit erklärt UBIQUITI NETWORKS, dass sich diese UBIQUITI NETWORKS device, in Übereinstimmung mit den grundlegenden Anforderungen und den anderen relevanten Vorschriften der Richtlinie 1999/5/EG befindet". (BMWi)
Ελληνική [Greek]	ΜΕ ΤΗΝ ΠΑΡΟΥΣΑ UBIQUITI NETWORKS ΔΗΛΩΝΕΙ ΟΤΙ UBIQUITI NETWORKS device, ΣΥΜΜΟΡΦΩΝΕΤΑΙ ΠΡΟΣ ΤΙΣ ΟΥΣΙΩΔΕΙΣ ΑΠΑΙΤΗΣΕΙΣ ΚΑΙ ΤΙΣ ΛΟΙΠΕΣ ΣΧΕΤΙΚΕΣ ΔΙΑΤΑΞΕΙΣ ΤΗΣ ΟΔΗΓΙΑΣ 1995/5/ΕΚ.
Magyar [Hungarian]	Alulírott, UBIQUITI NETWORKS nyilatkozom, hogy a UBIQUITI NETWORKS device, megfelel a vonatkozó alapvetõ követelményeknek és az 1999/5/EC irányelv egyéb elõírásainak.
Íslenska [Icelandic]	Hér me l sir UBIQUITI NETWORKS yfir ví a UBIQUITI NETWORKS device, er í samræmi vi grunnkröfur og a rar kröfur, sem ger ar eru í tilskipun 1999/5/EC.

Italiano [Italian]	Con la presente UBIQUITI NETWORKS dichiara che questo UBIQUITI NETWORKS device, è conforme ai requisiti essenziali ed alle altre disposizioni pertinenti stabilite dalla direttiva 1999/5/CE.
Latviski [Latvian]	Ar o UBIQUITI NETWORKS deklar , ka UBIQUITI NETWORKS device, atbilst Direkt vas 1999/5/EK b tiskaj m pras b m un citiem ar to saist tajiem noteikumiem.
Lietuviškai [Lithuanian]	UBIQUITI NETWORKS deklaruoja, kad šis UBIQUITI NETWORKS įrenginys atitinka esminius reikalavimus ir kitas 1999/5/EB Direktyvos nuostatas.
Malti [Maltese]	Hawnhekk, UBIQUITI NETWORKS, jiddikjara li dan UBIQUITI NETWORKS device, jikkonforma mal- ti ijiet essenzjali u ma provvedimenti o rajn relevanti li hemm fid-Dirrettiva 1999/5/EC.
Norsk [Norwegian]	UBIQUITI NETWORKS erklærer herved at utstyret UBIQUITI NETWORKS device, er i samsvar med de grunnleggende krav og øvrige relevante krav i direktiv 1999/5/EF.
Slovensky [Slovak]	UBIQUITI NETWORKS t mto vyhlasuje, e UBIQUITI NETWORKS device, sp a základné po iadavky a v etky príslu né ustanovenia Smernice 1999/5/ES.
Svenska [Swedish]	Härmed intygar UBIQUITI NETWORKS att denna UBIQUITI NETWORKS device, står I överensstämmelse med de väsentliga egenskapskrav och övriga relevanta bestämmelser som framgår av direktiv 1999/5/EG.
Español [Spanish]	Por medio de la presente UBIQUITI NETWORKS declara que el UBIQUITI NETWORKS device, cumple con los requisitos esenciales y cualesquiera otras disposiciones aplicables o exigibles de la Directiva 1999/5/CE.
Polski [Polish]	Niniejszym, firma UBIQUITI NETWORKS o wiadcza, e produkt serii UBIQUITI NETWORKS device, spełnia zasadnicze wymagania i inne istotne postanowienia Dyrektywy 1999/5/EC.
Português [Portuguese]	UBIQUITI NETWORKS declara que este UBIQUITI NETWORKS device, está conforme com os requisitos essenciais e outras disposições da Directiva 1999/5/CE.
Română [Romanian]	Prin prezenta, UBIQUITI NETWORKS declară că acest dispozitiv UBIQUITI NETWORKS este în conformitate cu cerințele esențiale și alte prevederi relevante ale Directivei 1999/5/CE.

Online Resources

Support **support.ubnt.com**

Community **community.ubnt.com**

Downloads **downloads.ubnt.com**

© 2013 Ubiquiti Networks, Inc. All rights reserved.