AEGIS UFLED White Light Illuminators

www.boschsecurity.com

BOSCH
Invented for life

- Patent-pending Constant Light technology ensures consistent illumination
- 3D Diffuser technology (Black Diamond) delivers even illumination designed specifically for CCTV
- Enables the optimum nighttime color performance of analog and megapixel cameras, IP platforms, and video analytics
- Reduced power consumption for a greener, more environmentally friendly solution with lower operating costs

AEGIS UFLED, the world's first Intelligent White-Light illuminator combines innovations in lighting technology and design to deliver absolute performance in night vision surveillance.
Aegis illuminators feature Constant Light technology, which automatically controls and adjusts light output to compensate for LED degradation and temperature changes. LED degradation results in poor light output, reduced image quality, and reduced illumination range. The Constant Light (patent-pending) technology maintains a constant level of light throughout the life of the illuminator, thus overcoming this performance-related issue identified by security consultants, installers, and end users alike.
3D Diffuser technology (Black Diamond) enables increased surveillance range, wider beam patterns, and evenly illuminated nighttime surveillance images.
Specifically designed for energy efficient operation, Aegis powers directly from any 12 to 24 VDC or 24 VAC supply for faster, flexible, cost effective installations.
Aegis UFLED has a robust, aluminum construction with acrylic front fascia and works even in harsh environments — guaranteed. It is IP67 rated and has an impressive temperature rating of -50 °C to +50 °C (-58 °F to +122 °F).

Functions

Even illumination
- 3D diffuser technology eliminates hotspots in the foreground and underexposed backgrounds
- Delivers even illumination designed specifically for CCTV
- Dramatically improves nighttime imaging, reducing noise and increasing video signal
- Even illumination reduces bit rate when used with encoding and digital recording systems, thus lowering storage requirements

Controlled by Constant Light technology
- Maintains a constant level of lighting performance for the life of the illuminator
- Maintains a constant level of lighting performance when operated at varying ambient temperatures
- Extended lifetime (typical lifetime 10 years)

Installer friendly installation features
- Low voltage input to the illuminator for safe installation
- Illuminator link port allows one illuminator to switch all others in a master/slave configuration
- Dual-mode camera port allows color/mono control from or to the camera
- Easy connection using dedicated cables

High Efficiency Surface Mount LEDs

- Industry-leading thermal management and super high-efficient LED's deliver maximum illumination

Certifications and approvals

Region	Certification
Europe	CE
USA	FCC + UL

Installation/configuration notes

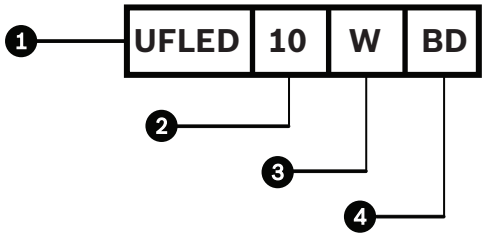

1.	Model	UFLED	AEGIS UFLED
2.	Beam Pattern	10	10°
		20	20°
		30	30°
		60	60°
		95	95°
		120	120°
3.	Light	W	White light
4.	Type	BD	Black Diamond

Dimensions

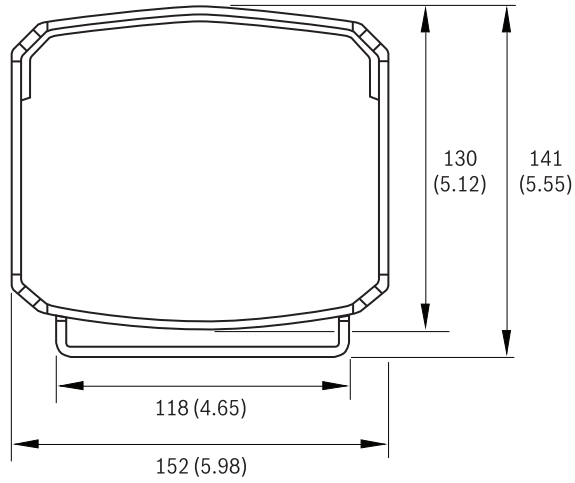

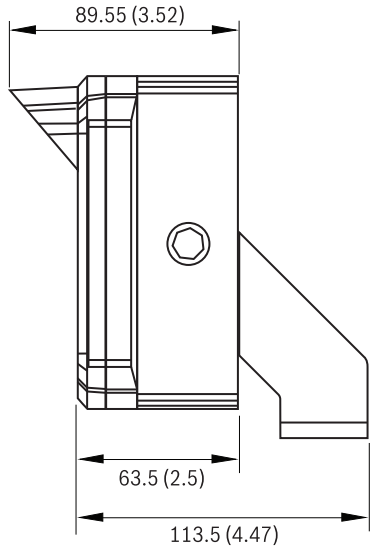

mm (in)

Technical specifications

Illuminator

LEDs	High efficiency LED array with current limited integral power circuit
Number of LEDs	18 high efficiency surface mount LEDs
Color temperature	4200 K
Vertical angles	10° (UFLED10-xxx, UFLED20-xxx, UFLED30-xxx, UFLED60-xxx); 14° (UFLED95-xxx); or 17° (UFLED120-xxx)

Power consumption	26 to 45 W (45 W max power) Power consumption will vary over time due to the intelligent IR's optical output control which compensates for LED degradation and ambient temperature fluctuations
Input Voltage	12 to 24 VDC or 24 VAC, 50/60 Hz
Temperature Range	-50 °C to +50 °C (-58 °F to +122 °F) max on full power
Environment	IP67
Construction	Robust, aluminum construction with acrylic front fascia
Weight	1.4 kg (3.1 lb)
Dimensions	152 x 188 x 115 mm (6.0 x 7.4 x 4.5 in)
Color	Black anodized heat sink with clear front fascia
Power Cable	Supplied with IP67 power connector and 5 m (16.4 ft) of connecting lead
Bracket	Wall mount U-bracket supplied

Performance Ranges

Model	Beam Pattern	Achievable Distance*	HFOV
UFLED10-WBD	10°	60 m (195 ft)	10 m (30 ft)
UFLED20-WBD	20°	40 m (130 ft)	15 m (50 ft)
UFLED30-WBD	30°	35 m (115 ft)	20 m (65 ft)
UFLED60-WBD	60°	25 m (80 ft)	30 m (100 ft)
UFLED95-WBD	95°	20 m (65 ft)	45 m (150 ft)
UFLED120-WBD	120°	15 m (50 ft)	50 m (165 ft)

*Actual illumination distance achieved is dependent on camera and lens characteristics.

Ordering information

UFLED10-WBD AEGIS Illuminator
AEGIS Intelligent White Light UFLED illuminator, 10°
Order number **UFLED10-WBD**

UFLED20-WBD AEGIS Illuminator
AEGIS Intelligent White Light UFLED illuminator, 20°
Order number **UFLED20-WBD**

UFLED30-WBD AEGIS Illuminator
AEGIS Intelligent White Light UFLED illuminator, 30°
Order number **UFLED30-WBD**

UFLED60-WBD AEGIS Illuminator
AEGIS Intelligent White Light UFLED illuminator, 60°
Order number **UFLED60-WBD**

UFLED95-WBD AEGIS Illuminator
AEGIS Intelligent White Light UFLED illuminator, 95°
Order number **UFLED95-WBD**

UFLED120-WBD AEGIS Illuminator
AEGIS Intelligent White Light UFLED illuminator, 120°
Order number **UFLED120-WBD**

Accessories

UFLED-CI-5M Switching Cable
5 m (16.4 ft) remote telemetry or day/night switching cable for Aegis illuminators
Order number **UFLED-CI-5M**

UFLED-CL-1M Link Cable
1 m (3.3 ft) telemetry link cable for Aegis illuminators
Order number **UFLED-CL-1M**

PSU-124-DC050 Universal Power Supply
Universal Outdoor Power Supply, 120 to 240 VAC, 50/60 Hz In; 24 VDC, 50 W Out
Order number **PSU-124-DC050**

PSU-224-DC100 Universal Power Supply
Universal Power Supply 2x24 VDC
Order number **PSU-224-DC100**

UPA-2450-50 Power Supply, 220 V, 50 Hz
Indoor, 220 VAC, 50 Hz In; 24 VAC, 50 VA Out
Order number **UPA-2450-50**

UPA-2450-60 Power Supply, 120 V, 60 Hz
Indoor, 120 VAC, 60 Hz In; 24 VAC, 50 VA Out
Order number **UPA-2450-60**

EXMB.020B L-bracket
L-Bracket Only, Heavy Duty, black
Order number **EXMB.020B**

EXPB-3-W-KIT Camera and IR Illuminator Wall-mount Kit
Wall-mount kit including camera housing for IR Illuminators
Order number **EXPB-3-W-KIT**

Represented by:

Americas:
Bosch Security Systems, Inc.
130 Perinton Parkway
Fairport, New York, 14450, USA
Phone: +1 800 289 0096
Fax: +1 585 223 9180
security.sales@us.bosch.com
www.boschsecurity.us

Europe, Middle East, Africa:
Bosch Security Systems B.V.
P.O. Box 80002
5617 BA Eindhoven, The Netherlands
Phone: + 31 40 2577 284
Fax: +31 40 2577 330
emea.securitysystems@bosch.com
www.boschsecurity.com

Asia-Pacific:
Robert Bosch (SEA) Pte Ltd, Security Systems
11 Bishan Street 21
Singapore 573943
Phone: +65 6571 2808
Fax: +65 6571 2699
apr.securitysystems@bosch.com
www.boschsecurity.asia

China:
Bosch (Shanghai) Security Systems Ltd.
201 Building, No. 333 Fuquan Road North IBP
Changning District, Shanghai
200335 China
Phone +86 21 22181111
Fax: +86 21 22182398
www.boschsecurity.com.cn

America Latina:
Robert Bosch Ltda Security Systems Division
Via Anhanguera, Km 98
CEP 13065-900
Campinas, Sao Paulo, Brazil
Phone: +55 19 2103 2860
Fax: +55 19 2103 2862
latam.boschsecurity@bosch.com
www.boschsecurity.com

© Bosch Security Systems 2013 | Data subject to change without notice
1751077259 | en, V2, 04. Oct 2013